Drilling Procedure

northeast
NATURAL ENERGY

MIP 3H
Horizontal Marcellus Well
Drilling Procedure
API Number: 47-061-01707
AFE: 100333-602
9-11-15

At a Glance

	Hole Size	Size	Grade	#/ft	Drill Depth	Casing Depth
Conductor	28"	24"	NA		50	50
Surface	17 1/2"	13 3/8"	J-55	54.5	530	508
Intermediate	12 1/4"	9 5/8"	J-55	40	1,830	1,803
Production	8 3/4"	5 1/2"	P-110	20	13,925	13,900

	MD	TVD
End Air	6,100	6,100
KOP	6,312	6,311
LP	8,000	7,501
TD	13,925	7,501
Lateral	5,896	
Lowest SF	2.22 4H	

Elevation	**1,058'**
KB	24'

Latitude	**39.601783**
Longitude	79.976123

Northeast Natural Energy Primary Contacts

Jay Hewitt – Drilling Manager – jhewitt@nne-llc.com – (304) 382-1825
Ian Costello – Completions Engineer – icostello@nne-llc.com – (304) 610-9764
Zack Arnold – GM Operations – zarnold@nne-llc.com – (304) 203-8059
Hollie Medley – Regulatory Coordinator – hmedley@nne-llc.com - (304) 241-5752 x 7108
Brett Loflin – VP Regulatory – bloflin@nne-llc.com - (304) 414-7063

Emergency / Compliance

Refer to Emergency Response Plan for emergency protocols and contact information

Inspector – Gayne Knitowski (304) 546-8171 Gayne.J.Knitowski@wv.gov
MECCA- Michael Fortney (681) 209-5217 mfortney@mecca911.org

Emergency Services - Dial 911 (For Emergency Use Only)

_____ John Adams, VP Operations

_____ Bret Loflin, VP Regulatory Affairs

_____ BJ Carney, VP Geoscience

_____ Sam Sommerville, VP Finance

_____ Jeannie Johnson, VP Land Operations

_____ Zach Arnold, GM Operations

_____ Matt Daniel, Landman

_____ Hollie Medley, Regulatory Coordinator

Introduction

NNE is dedicated to developing a safe and healthy environment for all employees and contractors through the combination of engineering design, practicality, and a hands on approach. Moreover, NNE is committed to protecting our natural environment and maintains a strong anti-pollution and spill prevention program in all areas where it conducts business. The objective of this procedure is to act as a guide to complete the curve and lateral while following all of NNE's core values.

Safety & Environmental

1. Pre-job safety meetings are to be held at the beginning of each shift and prior to any changes in operating conditions/procedures during a shift throughout the course of all operations.
2. All crews on location must have the same relief times to provide an accurate head count on location and uniform hand-over procedures and directions.
3. PJSM topics should encompass NNE core values, **stop work authority**, PPE requirements, muster areas, specific site concerns, notification processes, and specific operational concerns.
4. During PJSM, discuss NNE JSA and distribute for signature amongst all crew members. JSA must be completed relative to specific job hazards for operation.
5. NNE JSA does not replace contractor JSA. Each contractor JSA must be signed off on and collected by NNE supervisor before work may commence.
6. Any non-transient visitor to the pad not present for initial safety meeting, must report to company man upon arrival for sign-in on NNE JSA and briefing of site hazards. Non-transient visitors are defined as anyone that will leave a ten foot perimeter of their vehicle or may come within one-hundred feet of wellhead, production, or operating equipment.
7. A daily environmental inspection is required by supervisors and a NNE Environmental Checklist must be completed detailing inspection. When two supervisors are splitting oversight of an operation, the daytime supervisor is responsible for inspection/completion of such forms.
8. If an environmental/safety incident or near miss occurs, notify the NNE supervisor immediately and follow guidelines in provided Site Safety Plan for response. Complete incident report for documentation of the incident, and send to office for review.
9. All safety information, forms, JSAs, environmental checklists, and incident reports must be contained in a folder, separated daily, and turned in to NNE supervisor at the end of operations.
10. Make note of all safety meetings and incidents in daily reports.
11. During simultaneous operations, make sure that all parties performing work on the pad attend safety meetings and their presence is documented.

Pre-Rig Horizontal move

1. Get permit for well.
2. Make sure wells have been properly labeled.
3. Update all drilling plans.
4. Make sure E&S controls are in place and a paper copy is in the mail box.

northeast NATURAL ENERGY

5. Call DEP to set up a Pre-spud meeting 48 hours in advance.
6. Hold pre-spud meeting.
7. Call and email DEP with rig move date 24 hours before the move.
8. Add liner and mats to bigger rig size.
9. RU Patterson 254 over the hole ensuring no rubbing of casing.
10. Have copy of permit, Site Reclamation Plan, and Well site 911 Address company man shack.

Pre-Drilling

1. Check the depth of the wellhead in the cellar to ensure the spacer spool is high enough to get the BOP components out of the cellar.
2. Nipple up all BOP components. All equipment should have a minimum pressure rating of 5,000 psi, including BOP stack, standpipe, kelly hoses, vibrating hoses, choke lines, and choke manifold.
3. The BOP will consist of 5,000 psi choke manifold, 5,000 psi annular preventer, 5,000 psi blind ram, and a 5,000 psi pipe ram.
4. When any component of the BOP stack is broken apart a new ring gasket needs to be used. If the components are left together while moving the rig the old seal may be used as long as it passes the pressure test.
5. Once the rig is nippled up and all the choke and Kelly lines, are hooked up call the pressure testing company.
6. The equipment that needs to be pressure tested includes the following: Lines from outlet of the mud pumps through the standpipe and Kelly hoses, casing head valves, BOP stack, TIW valve, choke lines, choke manifold, and accumulator.
7. The accumulator test needs to be performed before any other tests are conducted.
8. Test each component at a low pressure of 250 psi for 5 minutes before doing any high pressure tests.
9. After the low pressure test passes, test all lines, hoses, pipe rams, blind rams, and the choke manifold for high pressure. Hold the test for 30 minutes. The pressure test should be conducted to 90% of the MAWP. For a 5,000 psi stack they should be tested to 4,500 psi. If something leaks bleed off the pressure and fix the leak, start the time over at zero for the re-test.
10. Test the annular for 2700 psi for a 5k stack, also for 30 minutes.

Curve

1. Assemble the rotary steerable with a 8 3/4" Smith 616 PDC
2. Make sure the BHA and drill pipe are torqued to specifications.
3. TIH to the bottom of the 9 5/8” shoe and conduct the shallow hole test.
4. Make sure the directional driller, tool pusher, and drillers know where the anticipated bottom of hole lies.
5. If no tight spots are encountered, stop 100 feet from bottom and start circulating SBM Ream and wash from this point on.
6. Make sure that tool pusher, directional driller, and Pason pipe tallies all match.
7. Once bottom of the hole is tagged, record it on Pason and in the daily report.
8. If tight spots were encountered pump at least one sweep at the bottom of the hole to ensure it is clean and free of any fill.
9. After tagging orient the motor to the desired azimuth according to the directional plans.
10. Drill through any lose cement until plug is taking weight.
11. Once plug is taking weight hold it constant until off the plug.

northeast NATURAL ENERGY

12. Ensure the mud weights and rheologies are within the proper ranges and note the starting ECD if the tool is being run. Mud weight should be at 12.5ppg when entering the Marcellus on a Synthetic based mud and should be raised as need.
13. Drill ahead on the curve to the directional plan. Ensure DLS are kept as close to the plan as possible staying below 13 degree / 100 ft.
14. Make sure to keep a close eye on each survey and be in constant contact with entire team.
15. If deviation from the original plan contact the Drilling Manager.
16. Continue drilling the curve to a tentative landing point of 8,000' MD and 7,501' TVD with help of the geo-steering team.

Lateral section

1. Drill ahead on the lateral, maintaining constant communication with the directional drillers, mud loggers and geo steering company.
2. Maintain a 200 feet/min minimum annular velocity at all times. Try to keep rotation as fast as possible to keep the hole clean.
3. Maintain a clean hole.
4. Have the floor hand watch the shakers for large or abnormal returns. The possum belly needs to be cleaned out every 200' to catch a caving hole or large cuttings as soon as possible.
5. After drilling to a tentative TD of 13,925' MD and 7,501' TVD, rotate the drill pipe and max allowable RPMs. Pump two bottoms up with weighted sweeps racking back a stand at every bottoms up to avoid wash outs.
6. If 25% overpull is encountered put three stands back in the hole and begin the bottoms up procedure again. If the tight spot goes away, resume coming out of the hole. If it does not begin to back ream.
7. If you have to back ream use the following parameters.
    a. Max RPM's
    b. 450 gpm
    c. 10 min/100'
    d. Once back reaming has started continue to 70 degrees in the curve.
8. Pump two sweeps at the base of the curve 2 ppg over and high viscosity. Make sure the hole is clean at this point.
9. Trip to the top of the curve. If the hole is tight, pump to the top of the curve.
10. Once at the top of the curve, lay down the drill pipe.
11. Inspect BHA and gauge bit, record details in daily report.
12. RU the lateral logging equipment and follow the attached procedure.

5 ½" Casing Run

1. Call for float equipment and centralizers.
2. Have float equipment, blast protectors and fiber delivered at least one day in advance. Arrange casing on pipe racks drift, count, and tally all the casing.
3. Rig up the power tong company, and ensure tongs are set to optimal torque ratings for the casing. Monitor the torque gauge on the power tongs to ensure casing is being torqued to desired limits.
4. Use the attached running procedure for the running of the fiber.
5. Float equipment: Guide shoe, pup, float collar pup and then a frac sleeve (thread lock shoe and one (1) joint above).

northeast NATURAL ENERGY

6. All centralizers should be 8 ¼”solid spiral centralizers every joint and once in the 9 5/8” casing run 8 ½” every joint. Stop rings will be used on both sides of each centralizer.
7. Run a rabbit in all the casing.
8. Fill the pipe with the charger pump or a low pressure pump as needed to avoid the pipe floating. The pipe should be filled at the top of the curve.
9. Run casing as close to 50’ of TD as possible.
10. Bring the casing mandrel and hang the casing in the casing head using the attached fiber wellhead guide.

5 ½” Cement

1. Have enough fresh water on location to cover 2 times the amount needed for the cement job.
2. Arrangements need to be made to make room for moving mud from mud pits to frac tanks, as cement is pumped.
3. Make sure that the thickening times for the cement blends running are 3 times the length of the total job.
4. Review all calculations and tallies with the cement operator at the pre-job safety meeting.
5. It should be ran to the surface with 10% excess unless.
6. Ensure there is enough flush to get back all of the drilling fluid.
7. Casing depths, sizes, and casing equipment configurations should be reviewed with the cement supervisor to ensure calculations are correct.
8. Rig up cement equipment, pressure test lines and keep a record.
9. Ensure that the fiber optics is recording.
10. Break circulation and start pumping the mud sweep and chemical wash.
11. Pump the cement job according to the pre-job specifications. If on SBM, send enough spacer to ensure that all of the mud is retrieved.
12. After cement is pumped, wash lines, drop the plug, and start displacement.
13. Follow the displacement by counting the displacement tanks. Never rely on the barrel counter for displacement volumes on a production string.
14. Never displace more than 5bbl over total displacement volume. If this situation occurs, consult the rig manager.
15. Pump displacement and record pressure until 5 bbl before plug lands. At this point, slow down pump rate to max 2 bpm and bump plug.
16. Bump plug to 1000 psi over landing pressure. Release to ensure latch and bump the plug again to 1000 psi over landing pressure. Note volume needed to pressure up again.
17. Bleed pressure down to 500 psi and close in head.
18. Nipple down the BOP.
19. Rig Down.

northeast NATURAL ENERGY

Equip name	Length	MP name	Offset
AH-107[3]	126.64		
AH-107[2]	124.64		
EDTC-B	122.64		
		CTEM	119.14
		Gamma Ray	117.27
		TelStatus	116.14
HNGS-BA	116.14		
		GR	113.15
HNGC-B	107.94		
		Tel Status	106.19
AH-107[1]	104.44		
PPC-B[2]	102.44		
		PPC-B Calipers	101.3
MAST-B	95.93		

MAMS 80.49
MAXS 54.64
PPC-B[1] 54.64
PPC-B Cal ipers 53.5
NGIT-BA 48.13

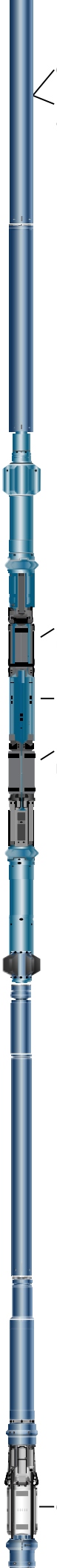
GPIT-F Inc linometer 43.18
NGIT Devi ation 43.18
NGIT Pad Upper 27.84
NGIT 25.96
NGIT Pad Lower 24.08
OBMT-B 17.22
OBMI 2.53

BNS-STD **0.46**

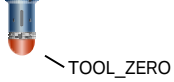

Lengths are in ft
Maximum Outer Diameter = 7.000 in
Line: Sensor Location, Value: Gating Offset
All measurements are relative to TOOL_ZERO

RUNNING PROCEDURE FOR NEON CABLE, PROTECTORS, AND WELLHEAD OUTLET

WELL: MIP 3H

CLIENT: NORTHEAST NATURAL ENERGY

Rev	Issue Date	Client Rep:	Prepared by	Verified by	Approved by
1			Mark Pitts		

Schlumberger, Confidential. © Copyright 2011 Schlumberger, Unpublished Work. All rights reserved. This work contains the confidential and proprietary trade secrets of Schlumberger and may not be copied or stored in an information retrieval system, transferred, used, distributed, translated or retransmitted in any form or by any means, electronic or mechanical, in whole or in part, without the express written permission of the copyright owner.

TLC Guideline Client version - Rev 5.

MIP Project
September-2015

Summary

GR-PPC-MSIP-PPC-NGI 8,150' – 13,800' MD
• Side entry sub always to remain inside the second intermediate casing set at ~1800'.
• Drillpipe connection: 4-1/2 IF
• Casing Shoe ~ 1803', Plan to run TLC CSES (Cable Side Entry Sub) to 1803'
Proposes 4 latches and latching earlier to have Compression at wireline head earlier while TIH w/ DP. We will not be latching in vertical for latch 1. KOP = 6000 ft.
• Latch 1: 7400' – 9200' (1800') start latch ~ 20-45° in curve to monitor tension/compression sub through curve
• Latch 2: 9000' – 10800' (1800')
• Latch 3: 10600' – 12400' (1800')
• Latch 4 12200' – 13800' (1600')

1.Safety Meeting and Rig Up: 3 Hours.
2.TIH w/ DP to Latch 1 Point: 7 hours
3.Install CSES and pump down PDWC to Latch and Power Tools and check for normal operation: 2 Hours
4.TIH Logging Down with Calipers closed: 3 hours
5.Open Calipers and Log while POOH bringing CSES back to surface: 3 hours.
6. Unlatch wireline, POOH w. wireline. remove CSES, Add 2480' DP. 5 hours.
7. Repeat steps 3,4,5,6 for Latch 2 Interval: 12 hours
8. Repeat Steps 3,4,5,6 for Latch 3 interval: 12 hours
9. Repeat Steps 3,4,5,6 for Latch 4 interval: 8 hours
10. After return CSES to rig floor, Pull wireline out of latch and out of hole, remove CSES and POOH with Drill Pipe and Logging Tools: 8 hours.
Total estimated time for TLC Lateral Logging Job = ~60-72 hours

Pre-departure Preparation

- ***Critical Information***

• Drill pipe size - (the way you plan to run it) 5"
• Drill pipe ID
• Drill Pipe Minimum restriction
• Drill pipe OD (at Open Hole Section and Beyond Top Of Liner)
• Drill pipe minimum drift
• Drill pipe thread (To where the Cable Side Entry Sub will Connect) 4.5IF
• Drill Pipe thread (to where the wireline tools will connect, or in open hole section)
• Inclination Survey; if any present at the moment (Attach via E-mail and will ask for updated one frequently)
• Liner shoe depth
• Top of Liner
• Liner ID
• Correlation log: Will have once we TD – gamma ray
• Expected Date for SLB to be onsite: TBD ~Sept 22nd
• Rig Status
• Borehole Salinity

Pre rig up meeting

- SLB, company man, rig manager, tool pusher should discuss and agree on the rig up plan
- SLB provide a tool sketch to the driller with tension and compression ratings
- A stabilizer is required to install below CSES to protect logging cable (stabilizer OD should be bigger than CSES OD)
- A full pipe tally from TD to surface is required, pipe tally should include logging toolstring, DWCH, ID sub, CSES,X-over length.
- Jars are not recommended with TLC.
- Clean mud is required to have successful latch. Use mud filter screen on every circulations.
- CSES should not go through deviation >40deg
- CSES not allowed going inside open hole and top of liner.

Rig up

1. Safety meeting must be held before rig up . (Slb & Drilling)
2. Rig up the tools, DWCH, ID sub with tugger line and elevator (Slb & Drilling)
3. Surface Latch and check the logging tools. (Slb)

4. Clear off the rig floor and BOP area before loading RA source. (Slb)
5. Bring up the tool with rig elevator using our fishing sling or using a pup joint above DWCH to load the radioactive sources (Slb, Drilling)
6. Connect DP to ID sub and RIH with drill pipe, don't over torque to prevent damage to DWCH.- **Standard DWCH-C 9000 ft-lbs, Slim DWCH-SA 2500 ft-lbs (Drilling)**

   Verify use of bowl with cable guide contacts to be verified

RIH

1. RIH with drillpipe
   - All pipes have to be drifted while RIH.
   - **Rabbit OD** has to be **minimum 2.4 in for Standard TLC and 1.5 in for Slim TLC** (if no swap cup being used). A larger drift "rabbit" should be used with larger pipe ID to remove excess scale or corrosion inside the pipe. For slim, the rabbit OD has to be larger than the swab caps OD.
   - Do not turn the pipe in hole. Rotary table must be locked. Mark rotary table position respect to drill floor
   - Running speed 3 min/stand. Soft start, soft stops. In high dog leg severity decrease speed
   - Circulate every 10 stands 1 ½ pipe volume with clean mud. Check and note down for mud return, flow rate and pressure between circulations to make sure no plugging at DWCH. Mud filter screen must be used during circulation. Maximum flow rate 600gal/min for standard DWCH and 200gal/min for Slim DWCH.
   - Don't put any dope on the drill pipe box, put a little on the pin
   - Keep the hole covered at all time
   - If crew change, another safety meeting must be held.
2. RIH until latching depth
3. Circulate 1 ½ pipe volume with clean mud once tools reached latching depth. Check for mud return, flow rate and pressure between circulations to make sure no plugging at DWCH. Mud filter screen must be used during circulation. Maximum flow rate 600gal/min for standard DWCH and 200gal/min for Slim DWCH.

Latch

1. A safety meeting must be held before start.
2. Rig up Sheave Wheels. Upper sheave wheel hang at a beam (A-Frame) with the fishing sling. Beam rating must be >40000lbs. (SLB, Drilling)
3. Pick up PWCH, CSES. Hang up CSES with tugger line (SLB)
4. Go down with PWCH to 100 m (SLB)
5. Install CSES & connect mud pump to CSES. Mud filter must be used (Drilling)
6. **Run in PWCH (SLB)**
7. Stop pumping and stop cable 100 m above latch point
8. Start RIH PWCH again and re-start pumping for latching.
   - For **Standard TLC** increase the mud pumping rate gradually **from 200 psi – 800 psi (Maximum 1000 psi).** Maximum flow rate 325 galUS/minute.
   - For **Slim TLC** increase the pumping rate gradually from **200 Kpa – 725 psi (Maximum 800 psi).** Maximum flow rate 116 galUS/minute.
9. Power up and check tool (SLB)
10. Install shear clamp. (SLB)
11. Clear off all people from rig floor before doing pull test. (SLB)
12. Pull test cable clamp to 1000 lbs less than the rating of the shear bolts and hold tension for at least 1 minute. (SLB)
13. Install cable pulley, adjust it smartly to keep cable clear from any obstruction, moving objects during operation. Try to keep CSES facing at high side of the hole. (SLB)

Logging down

1. Once SLB ready, starting down log with drill pipe and cable moving together (SLB and Drilling)
   - Watch out not to damaged the cable at all time. (Drilling)
   - Watch out not to caught the cable on the elevator. (Drilling)
   - Rotary table and traveling Block has to be locked from rotation. Mark the drill floor with rotary table (Drilling)
   - Put the pipe slips cautiously, ensure the cable doesn't get caught inside the bushing groove. (Drilling)

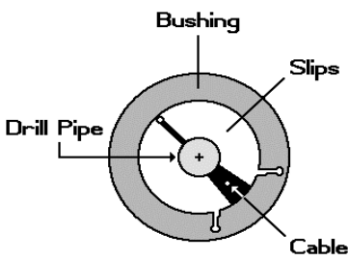

   - Keep clear and constant communication between rig floor and unit. (Drillling and SLB)
   - Driller must confirm with SLB before making any pipe movement. (Drilling and SLB)
   - Don't turn drill pipe. (Drilling)
   - Don't over toque drill pipe. (Drilling)
   - Keep fill up the pipe every 10 stands on the way down. (Drilling)

- Monitor the Martin Decker for any obstruction (Drilling)
- Monitor the ACTS compression, set head tension alarm to maximum compression limit (SLB)
- Log down with speed 1800ft/hr or slower. Getting a good down log is important in TLC operation. (SLB)

2. Slow down speed when tools are near TD, **Do not tag TD**. Keep at least 30ft off TD. (SLB & Drilling

Log up

1. Once at TD, reverse direction, start up log
   - Keep monitoring the down-hole tension and surface cable tension. (SLB)
   - Dill pipe must not go down while caliper opened, push or hammer down the pipe slips to make sure it firmly grip drillpipe before sit the pipe down. (Drilling)
   - Driller follows instruction from SLB for the speed 18 to 23 ft/min. (SLB & Drilling)
2. When the log is over, close caliper (after caliper check in casing). (SLB)
3. Do repeat section if necessary (consult client)
4. Do any down hole calibration.

Unlatch and POOH

1. When CSES is above the rig floor, power down logging tool. (SLB)
2. Clear rig floor. Pull to unlatch PWCH. (SLB)
3. Stop PWCH at 300ft, disconnect CSES and pick up CSES using tugger line (SLB & Drilling)
4. Continue POOH PWCH (SLB)
5. Rig down PWCH, CSES, upper and lower sheave wheels. (SLB)
6. Continue POOH tools with drill pipe. (Drilling)
7. Clear off rig floor when DWCH reached surface
8. Unload the sources. (SLB)
9. Rig Down the tool string. (SLB)

DOs!	DONTs !
1. RABBIT THE PIPE (AND MAKE SURE THE RABBIT IS ACCOUNTED FOR) 2. PUT MINIMUM PIPE DOPE ON PINs ONLY (AND NO DOPE ON THE BOX END) 3. LOCK THE ROTARY TABLE 4. START AND STOP “SOFTLY” 5. USE FILTER SCREENS WHEN CIRCULATING 6. CHECK MUD LEVEL INSIDE DRILLPIPE PERIODICALLY 7. BE CAREFUL DURING SETTING AND PULLING OUT THE SLIPS	1. ROTATE THE PIPE (UNLESS ASKED TO BY THE SLB ENGINEER) 2. START PIPE MOVEMENT WITHOUT SLB ACKNOWLEDGEMENT 3. LEAVE THE PIPE OPEN DURING CONNECTIONS (ALWAYS COVER THE PIPE) 4. OVER-TORQUE THE PIPE DURING CONNECTIONS (THIS CAUSES THE PIPE TO ROTATE) 5. MAKE ANY SUDDEN AND JERKY MOVEMENTS WITH THE PIPE

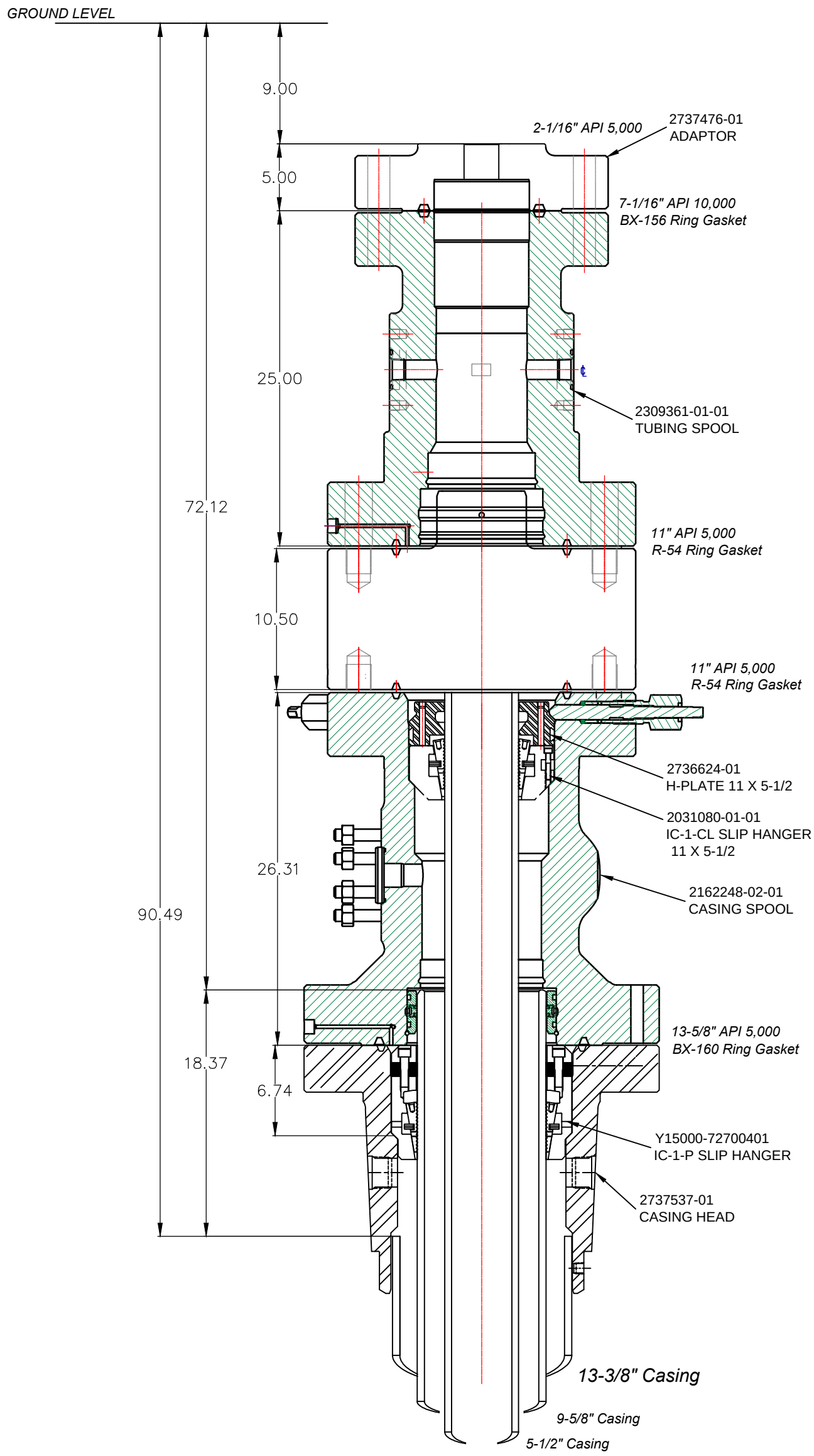

01
REV

CAMERON

Cooper Cameron Corporation
Cameron Division
P.O. Box 1212
Houston, TX 77251-1212

ZE 650148993

NNE STACK-UP

THIS DOCUMENT CONTAINS CONFIDENTIAL AND TRADE SECRET INFORMATION WHICH IS THE PROPERTY OF CAMERON, A DIVISION OF COOPER CAMERON CORPORATION AND RECEIPT OR POSSESSION DOES NOT CONVEY ANY RIGHTS TO LOAN, SELL OR OTHERWISE DISCLOSE SAID INFORMATION. REPRODUCTION OR USE OF SAID INFORMATION FOR ANY PURPOSE OTHER THAN THE PURPOSE FOR WHICH SAID INFORMATION WAS SUPPLIED IS PROHIBITED WITHOUT EXPRESS WRITTEN PERMISSION FROM CAMERON. THIS DOCUMENT IS TO BE RETURNED TO CAMERON UPON REQUEST OR UPON COMPLETION OF THE PURPOSE FOR WHICH IT WAS SUPPLIED.

DO NOT SCALE

DRAWN BY	M. SHAH	DATE	30 JUN 15
CHECKED	J. CLIFTON	DATE	30 JUN 15
APPROVED		DATE	

INITIAL USE B/M

SHEET 1 OF 1

SD-045870-99-19

OBJECTIVE

Prepare and install Neon cable for DTS/hDVS with casing string, cement casing string.

SCOPE

The scope of this procedure covers the preparation, installation and running of the Neon cable.

RESPONSIBILITIES

The Sales Engineer is responsible for the initial procedure, verifying the correct equipment has been specified and coordinating the handoff with the Schlumberger location manager.

The Schlumberger Location manager (or designate) is responsible for ordering the correct equipment, tracking the shipments, and coordinating the service equipment and personnel.

The Service Personnel who installs this equipment is responsible for proper job preparation, proper job execution, communication with the clients field representative and coordinating communications from the field location to the Location Manager and Sales Engineer.

SPECIAL NOTE: Neon cable will be spliced and respooled at the Bakersfield location prior to shipping to the location. No turnaround is required as this is a single ended installation.
This is a general procedure, not all details are included.
Refer to the referenced installation manuals for full details.

Schlumberger, Confidential. © Copyright 2011 Schlumberger, Unpublished Work. All rights reserved. This work contains the confidential and proprietary trade secrets of Schlumberger and may not be copied or stored in an information retrieval system, transferred, used, distributed, translated or retransmitted in any form or by any means, electronic or mechanical, in whole or in part, without the express written permission of the copyright owner.

PROCEDURE

Prior to Equipment Dispatch from Location

1. Technical inspection on both cables to be done and documented, complete with OTDR. Results to be placed in job file.
2. Spools to be mounted in spoolers prior to cable splicing
3. Cables to be spliced as per the Neon Installation Manual #1650944455, version 1.7
4. OTDR checks to be done and recorded, placed in the job folder.
5. Line to be spooled onto one reel and prepared for shipping.
6. Load installation cabin for job, OTDR, Fusion Splicer, Cannon-Forum clamp kits and other necessities as required.

Arrival at Wellsite

1. General meeting with on-site client representative and tool-pusher
2. Examine and check to make sure all equipment has arrived, any damages or shortages to be noted and appropriate personnel to be notified
3. Spot equipment and prepare for rig up for installation
4. Inventory clamps (supplied by Pinnacle –Halliburton)
5. Check clamps fit casing and Schlumberger equipment

Casing Running

1. Pick up first casing joint, install needed equipment including 5 blade cantralizer

Schlumberger, Confidential. © Copyright 2011 Schlumberger, Unpublished Work. All rights reserved. This work contains the confidential and proprietary trade secrets of Schlumberger and may not be copied or stored in an information retrieval system, transferred, used, distributed, translated or retransmitted in any form or by any means, electronic or mechanical, in whole or in part, without the express written permission of the copyright owner.

2. Pick up next casing joints as per tally and install desired equipment
3. When DTS lowermost point is reached, attach cable to casing using one Cross-Coupling protector (Cannon-Forum #5500-A-06), taking care to not pinch cable. End of cable termination should be just below protector to aid in anchoring of cable and to prevent the cable from catching on the sidewall of the borehole.

4. Secure protector to casing using the Cannon protector installation kit, taking care that pins are driven from top to bottom. Do Not Install protectors if pins are driven from the bottom to the top!
5. Run casing joint to centralizer; install Blast Protector (Cannon-Forum #5500-72F-76P4-3C316L) just above centralizer. Take care that cables are tight and pass through smallest diameter of centralizer.
6. Install pins on Blast Protector in the same direction of Cross Coupling protector.
7. Continue running in hole installing cross couplings at each casing connection and blast protectors at mid-way point of each casing joint until the heel point is reached.
8. When heel of well is reached and the casing is no longer to be perforated, installation of Blast Protectors to cease. Cross Couplings will continue to be installed until the tubing hanger is reached.

Preparation for Cement

1. When casing landing point is reached, do NOT cut cable
2. Cech cable for integrity using OTDR and DTS Ultra
3. Record OTDR and place in job file
4. Connect DTS unit to Neon cable in preparation for monitoring cement job

Schlumberger, Confidential. © Copyright 2011 Schlumberger, Unpublished Work. All rights reserved. This work contains the confidential and proprietary trade secrets of Schlumberger and may not be copied or stored in an information retrieval system, transferred, used, distributed, translated or retransmitted in any form or by any means, electronic or mechanical, in whole or in part, without the express written permission of the copyright owner.

5. Monitor cement job from start of pumping operations through cement cure, or until notified to stop by company representative on location

Casing Hanger

1. Stop DTS acquisition and prepare for casing hanger
2. Cut cable at the appropriate distance from rig floor, cap cable with temporary Swagelok fitting to prevent dirt, debris and moisture from entering cable
3. Prepare to nipple down the BOP stack
4. After stack has been nippled down, prepare lines to be fed through casing hanger by cutting to desired length, stripping encapsulation and straightening cable
5. Place Swagelok (1/4”NPT x ¼” tubing) onto prepared cable with threads oriented correctly. Verify nut and ferrules are on cable before threading union onto cable
6. Thread cable through passage in casing hanger. When cable is pulled into position, assemble Swagelok fitting to bottom of casing hanger.
7. Place Teflon tape onto threads of union and tighten union into casing hanger. Slide ferrules and nut into place and tighten finger tight. Use wrench and tighten 1-1/4 turns
8. Repeat fitting installation for top of casing hanger taking care threads, ferrules and nut are oriented correctly.
9. Land casing hanger as per Camron procedures
10. Thread excess Neon cable through the exit port on the wellhead, leaving 3 wraps of cable above the casing hanger. This excess cable will allow for an additional cable in case the cable should be damages during flange and wellhead outlet installation.
11. Install flange and prepare to install AnTech wellhead adaptor (part # AN-14792)
12. Install adapter as per AnTech Procedure and prepare to pressure test void

Schlumberger, Confidential. © Copyright 2011 Schlumberger, Unpublished Work. All rights reserved. This work contains the confidential and proprietary trade secrets of Schlumberger and may not be copied or stored in an information retrieval system, transferred, used, distributed, translated or retransmitted in any form or by any means, electronic or mechanical, in whole or in part, without the express written permission of the copyright owner.

13. Pressure test void.
14. When a successful void test is completed, continue installing AnTech Wellhead Outlet (AN-14784) as per procedure from Antech. NOTE: As we are using fiber only from the Neon cable, there is no provision for the electrical conductor. The electrical conductor will need to be cut flush with the end of the ¼″ steel control line
15. When WHO is completed, pressure test as per AnTech procedures.
16. When successful pressure test are completed, connect surface cable to WHO. Verify cable integrity with OTDR and DTS Utra.
17. Prepare to connect surface cable to surface DTS unit. NOTE: Hyperion may be substituted for DTS-Ultra due to the surface facilities available.
18. Program DTS unit for communications to client Scada system (ModBus)
19. Verify data.
20. Rig down, pack up, ship equipment back to Bakersfield.

Schlumberger, Confidential. © Copyright 2011 Schlumberger, Unpublished Work. All rights reserved. This work contains the confidential and proprietary trade secrets of Schlumberger and may not be copied or stored in an information retrieval system, transferred, used, distributed, translated or retransmitted in any form or by any means, electronic or mechanical, in whole or in part, without the express written permission of the copyright owner.

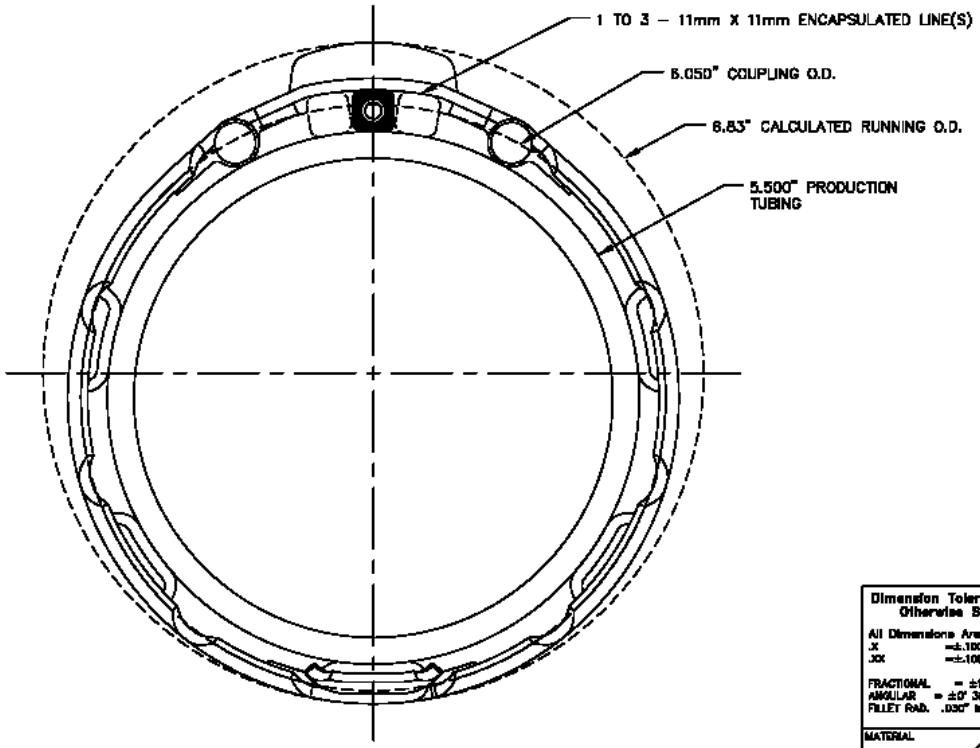

ASSEMBLY P/N: 5500-A-06

PROTECTOR IS INSTALLED ON 5.500", 29.70 PPF BTC PRODUCTION TUBING WITH A 6.050" O.D. COUPLING (9.250" LG)

WITH
1 TO 3 – 11mm X 11mm ENCAPSULATED LINE(S)

CALCULATED RUNNING O.D.: 6.83"

UNIT WEIGHT: 7.33 LBS

Dimension Tolerance Unless Otherwise Specified:	CANNON SERVICES
All Dimensions Are In Inches .X =±.100" =±2.54mm .XX =±.100" =±2.54mm FRACTIONAL = ±1/64" ANGULAR = ±0° 30' FILLET RAD. .030" MAX	P.O. BOX 1306 PH: (281) 498–2505 STAFFORD, TEXAS 77497 FAX: (281) 498–5727
	TITLE: END VIEW OF 5500–A–06
MATERIAL: —	SIZE: B · DRAWING NUMBER: PRO–1128 · REV.: A
APPROVED BY: AC · DRAWN BY: RAL	SCALE: 1"=1" · SHEET 1 OF 2 · DATE: 10/22/13

This is the property of Cannon Services, and may not be used for any purpose unless authorized in writing by Cannon Services and which, upon demand, shall be returned to Cannon Services. This document may contain Cannon Services confidential, proprietary information and shall not be copied, reproduced, sent, transferred to other documents or disclosed to others for any purpose unless specifically authorized in writing by Cannon Services.

Schlumberger, Confidential. © Copyright 2011 Schlumberger, Unpublished Work. All rights reserved. This work contains the confidential and proprietary trade secrets of Schlumberger and may not be copied or stored in an information retrieval system, transferred, used, distributed, translated or retransmitted in any form or by any means, electronic or mechanical, in whole or in part, without the express written permission of the copyright owner.

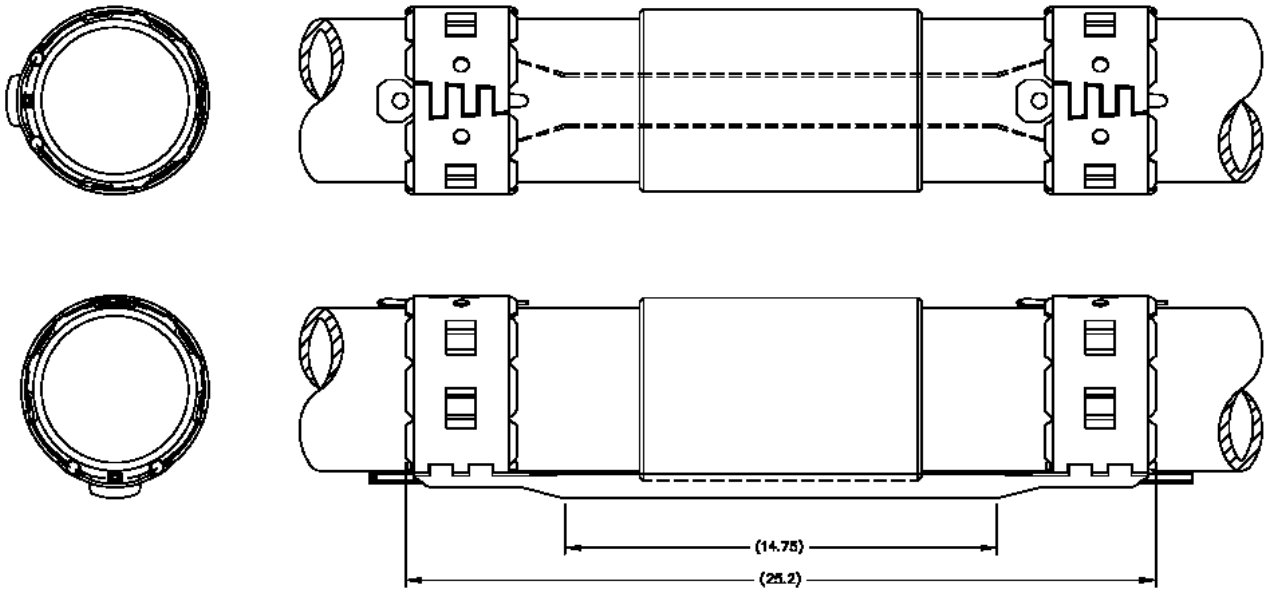

QTY	PART NUMBER	DESCRIPTION	MATERIAL SPECIFICATION
2	11005–07	5.500" LEFT COLLAR	ASTM–A–1011
2	11010–07	5.500" RIGHT COLLAR	ASTM–A–1011
1	11004–06	0.430" X 25" CHANNEL	ASTM–A–1011
4	11009	HINGE PIN	ASTM–A–545
2	11001	TAPER PIN	ASTM–A–568/569

Dimension Tolerance Unless Otherwise Specified:
All Dimensions Are In Inches
.X =±.100" =±2.54mm
.XX =±.100" =±2.54mm
FRACTIONAL = ±1/64"
ANGULAR = ±0° 30'
FILLET RAD. .030" MAX

MATERIAL

APPROVED BY: AC
DRAWN BY: RAL

CANNON SERVICES
P.O. BOX 1306 PH: (281) 498–2505
STAFFORD, TEXAS 77497 FAX: (281) 498–5727

TITLE: SIDE VIEW OF 5500–A–06

SIZE: B
DRAWING NUMBER: PRO–1129
REV. A
SCALE: 1"=3"
SHEET 2 OF 2
DATE: 10/22/13

This is the property of Cannon Services, and may not be used for any purpose unless authorized in writing by Cannon Services and which, upon demand, shall be returned to Cannon Services. This document may contain Cannon Services confidential, proprietary information and shall not be copied, reproduced, used, transferred to other documents or disclosed to others for any purpose unless specifically authorized in writing by Cannon Services.

Schlumberger, Confidential. © Copyright 2011 Schlumberger, Unpublished Work. All rights reserved. This work contains the confidential and proprietary trade secrets of Schlumberger and may not be copied or stored in an information retrieval system, transferred, used, distributed, translated or retransmitted in any form or by any means, electronic or mechanical, in whole or in part, without the express written permission of the copyright owner.

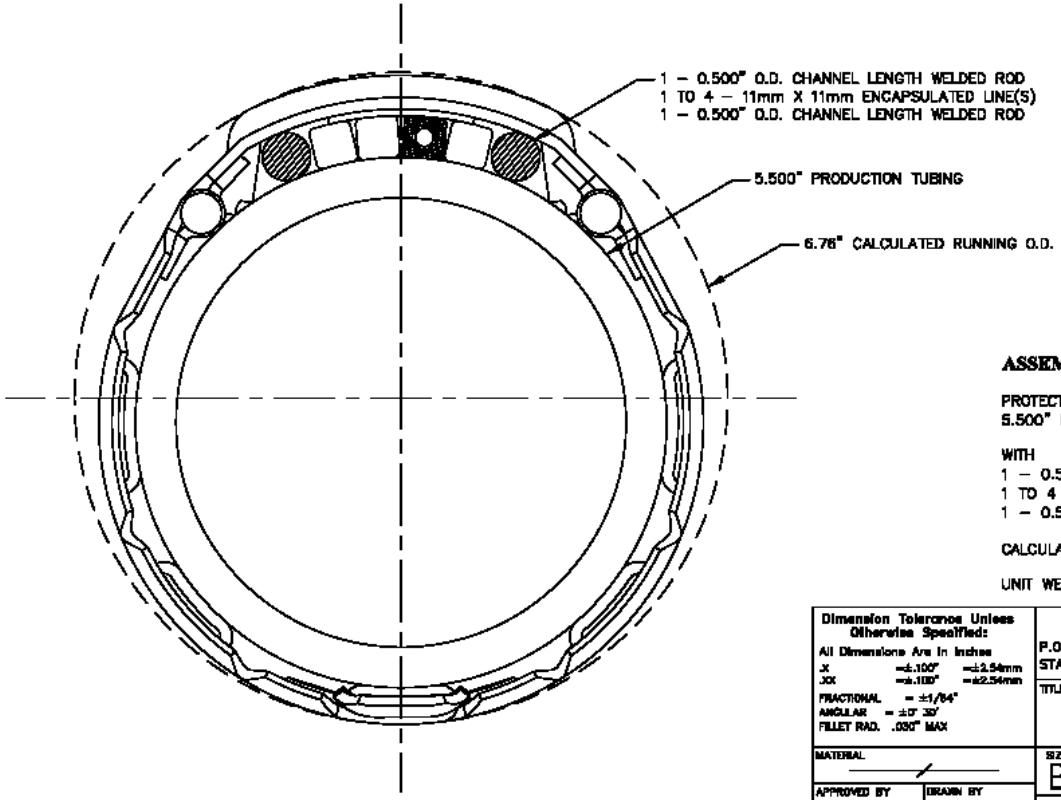

ASSEMBLY P/N: 5500-72F-76P4-3C316L

PROTECTOR IS INSTALLED MID–JOINT ON
5.500" PRODUCTION TUBING

WITH
1 – 0.500" O.D. CHANNEL LENGTH WELDED ROD
1 TO 4 – 11mm X 11mm ENCAPSULATED LINE(S)
1 – 0.500" O.D. CHANNEL LENGTH WELDED ROD

CALCULATED RUNNING O.D.: 6.76"

UNIT WEIGHT: 33.0 LBS

Dimension Tolerance Unless Otherwise Specified:	CANNON SERVICES	
All Dimensions Are In Inches .X =±.100" =±2.54mm .XX =±.100" =±2.54mm FRACTIONAL = ±1/64" ANGULAR = ±0° 30' FILLET RAD. .030" MAX	P.O. BOX 1306 STAFFORD, TEXAS 77497	PH: (281) 495–2505 FAX: (281) 495–5727
	TITLE END VIEW OF 5500–72F–76P4–3C316L	
MATERIAL APPROVED BY: RR DRAWN BY: RAL	SIZE: B DRAWING NUMBER: CSS–953 SCALE: 1" = 1" SHEET 1 OF 2 DATE: 9/17/14	REV. A

This is the property of Cannon Services and may not be used for any purpose unless authorized in writing by Cannon Services and which, upon demand, shall be returned to Cannon Services. This document may contain Cannon Services confidential, proprietary information and shall not be copied, reproduced, used, transferred to other documents or disclosed to others for any purpose unless specifically authorized in writing by Cannon Services.

Schlumberger, Confidential. © Copyright 2011 Schlumberger, Unpublished Work. All rights reserved. This work contains the confidential and proprietary trade secrets of Schlumberger and may not be copied or stored in an information retrieval system, transferred, used, distributed, translated or retransmitted in any form or by any means, electronic or mechanical, in whole or in part, without the express written permission of the copyright owner.

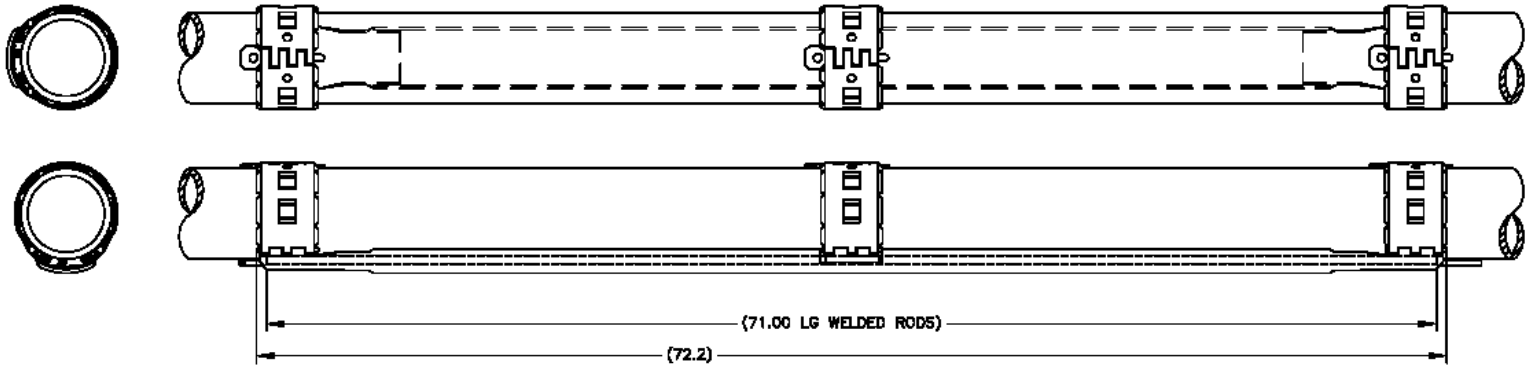

QTY	PART NUMBER	DESCRIPTION	MATERIAL SPECIFICATION
3	11005–06–316L	5.000" LEFT COLLAR	316L STAINLESS STEEL
3	11010–06–316L	5.000" RIGHT COLLAR	316L STAINLESS STEEL
1	11004–76–72F–3C	0.500" X 2.90" X 72" CHANNEL, ZERO OFFSET, 3 COLLARS	ASTM–A–1011
6	11009–316L	HINGE PIN	316L STAINLESS STEEL
3	11001–316L	TAPER PIN	316L STAINLESS STEEL

Dimension Tolerance Unless Otherwise Specified:
All Dimensions Are In Inches
.X =±.100" =±2.54mm
.XX =±.100" =±2.54mm
FRACTIONAL = ±1/64"
ANGULAR = ±0° 30'
FILLET RAD. .030" MAX

MATERIAL —/—
APPROVED BY RR
DRAWN BY RAL

CANNON SERVICES
P.O. BOX 1306
STAFFORD, TEXAS 77497
PH: (281) 495–2505
FAX: (281) 495–5727

TITLE
SIDE VIEW OF
5500–72F–76P4–3C316L

SIZE B
DRAWING NUMBER CSS–954
REV. A
SCALE: 1" = 6" SHEET 2 OF 2 DATE: 9/17/14

This is the property of Cannon Services and may not be used for any purpose unless authorized in writing by Cannon Services and which, upon demand, shall be returned to Cannon Services. This document may contain Cannon Services confidential, proprietary information and shall not be copied, reproduced, used, transferred to other documents or disclosed to others for any purpose unless specifically authorized in writing by Cannon Services.

tial
and proprietary trade secrets of Schlumberger and may not be copied or stored in an information retrieval system, transferred, used, distributed, translated or retransmitted in any form or by any means, electronic or mechanical, in whole or in part, without the express written permission of the copyright owner.

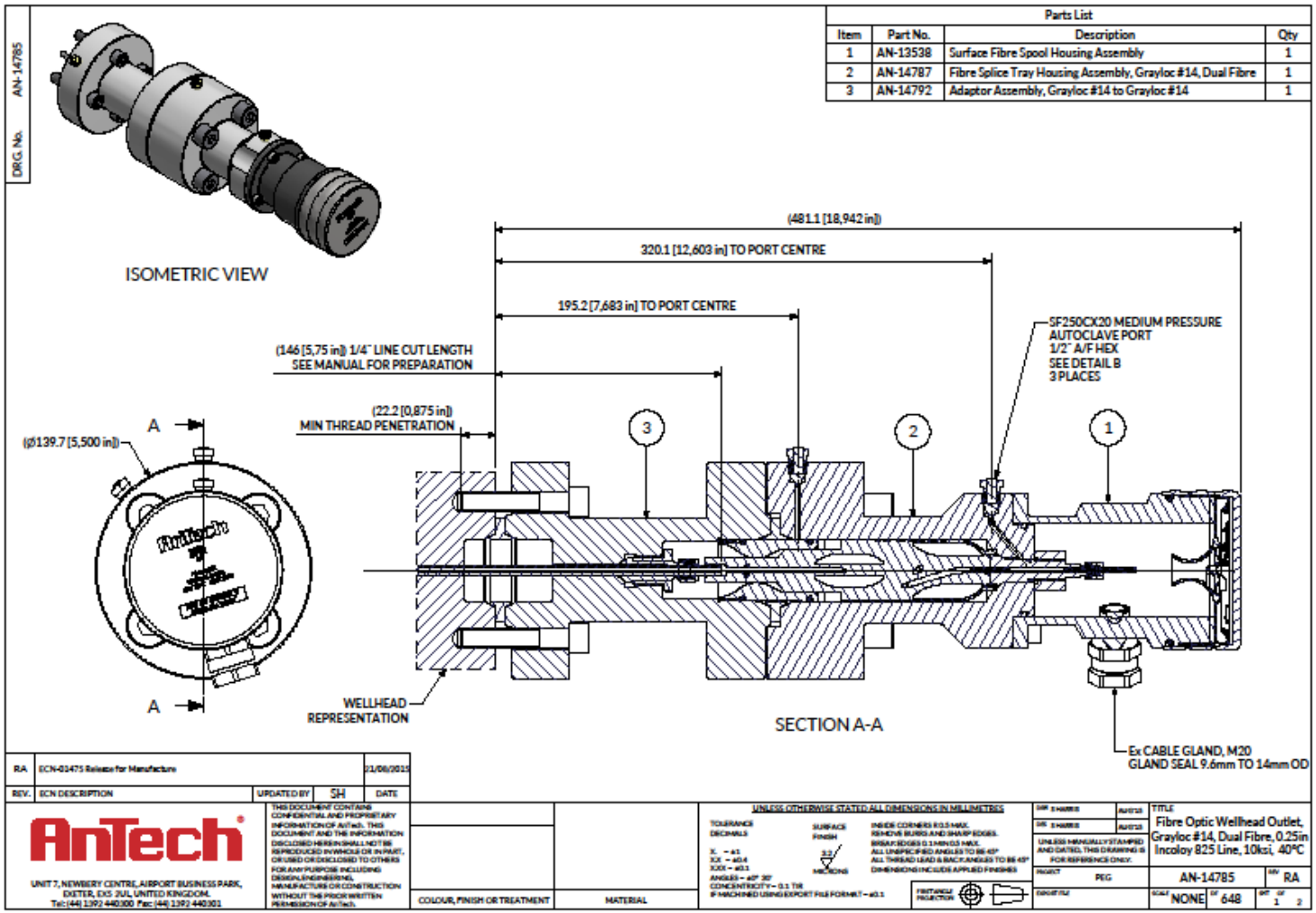

The confidential and proprietary trade secrets of Schlumberger and may not be copied or stored in an information retrieval system, transferred, used, distributed, translated or retransmitted in any form or by any means, electronic or mechanical, in whole or in part, without the express written permission of the copyright owner.

DRG. No. AN-14785

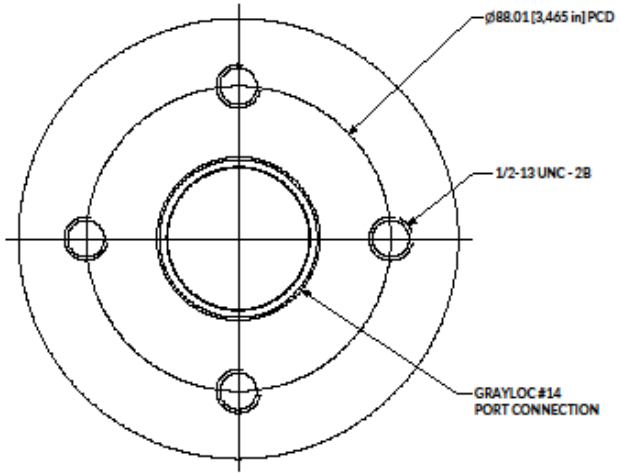

COMPATIBLE WELLHEAD GEOMETRY

1/4" AE MEDIUM PRESSURE
(SF250CX20) PORT, 20ksi
DETAIL B

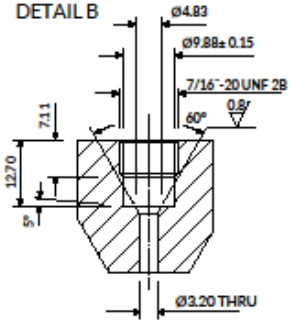

API SPECIFICATION 6A / ISO 10423:	
MARKING -	API 6A/ISO 10423 -20°C ≤ T ≤ 40°C FF PSL3
MATERIAL CLASS -	FF - Sour Service as per NACE MR 00175 / ISO 15156
PRODUCT SPECIFICATION LEVEL -	3
WORKING PRESSURE -	10,000 psi
TEST PRESSURE -	15,000 psi
SEAL RING -	Grayloc #14
SEAL RING MATERIAL -	AISI 4140, PTFE

WELLHEAD SPECIFICATION:	
MINIMUM TEMPERATURE -	-20°C
MAXIMUM TEMPERATURE -	40°C

MOUNTING DETAILS (BOLT):	
MATERIAL AND GRADE -	ASTM A320 L7 1960
PLATING -	ZINC PLATED
THREAD AND LENGTH -	0.5in 13 UNC x 2.5in

REV.	ECN DESCRIPTION	UPDATED BY	DATE
RA	ECN-01475 Release for Manufacture	SH	21/06/2013

AnTech
UNIT 7, NEWBERY CENTRE, AIRPORT BUSINESS PARK, EXETER, EX5 2UL, UNITED KINGDOM.
Tel: (44) 1392 440300 Fax: (44) 1392 440302

THIS DOCUMENT CONTAINS CONFIDENTIAL AND PROPRIETARY INFORMATION OF AnTech. THIS DOCUMENT AND THE INFORMATION DISCLOSED HEREIN SHALL NOT BE REPRODUCED IN WHOLE OR IN PART, OR USED OR DISCLOSED TO OTHERS FOR ANY PURPOSE INCLUDING DESIGN, ENGINEERING, MANUFACTURE OR CONSTRUCTION WITHOUT THE PRIOR WRITTEN PERMISSION OF AnTech.

COLOUR, FINISH OR TREATMENT | MATERIAL

UNLESS OTHERWISE STATED ALL DIMENSIONS IN MILLIMETRES
TOLERANCE DECIMALS: X. ±0.1, X.X ±0.4, X.XX ±0.1, ANGLES ±0° 30', CONCENTRICITY ±0.1 TIR, IF MACHINED USING EXPORT FILE FORMAT ±0.1
SURFACE FINISH 3.2 MICRONS
INSIDE CORNERS R0.5 MAX. REMOVE BURRS AND SHARP EDGES. BREAK EDGES 0.1 MIN 0.5 MAX. ALL UNSPECIFIED ANGLES TO 88-45° ALL THREAD LEAD & BACK ANGLES TO 88-45° DIMENSIONS INCLUDE APPLIED FINISHES
FIRST ANGLE PROJECTION

DWN S HARRIS 04/07/13
CHK S HARRIS 04/07/13
UNLESS MANUALLY STAMPED AND DATED, THIS DRAWING IS FOR REFERENCE ONLY.
PROJECT PEG
DRAWING TITLE

TITLE Fibre Optic Wellhead Outlet, Grayloc #14, Dual Fibre, 0.25in Incoloy 825 Line, 10ksi, 40°C
AN-14785 REV RA
SCALE NONE SHT 648 OF SHT 2 OF 2

he confidential and proprietary trade secrets of Schlumberger and may not be copied or stored in an information retrieval system, transferred, used, distributed, translated or retransmitted in any form or by any means, electronic or mechanical, in whole or in part, without the express written permission of the copyright owner.

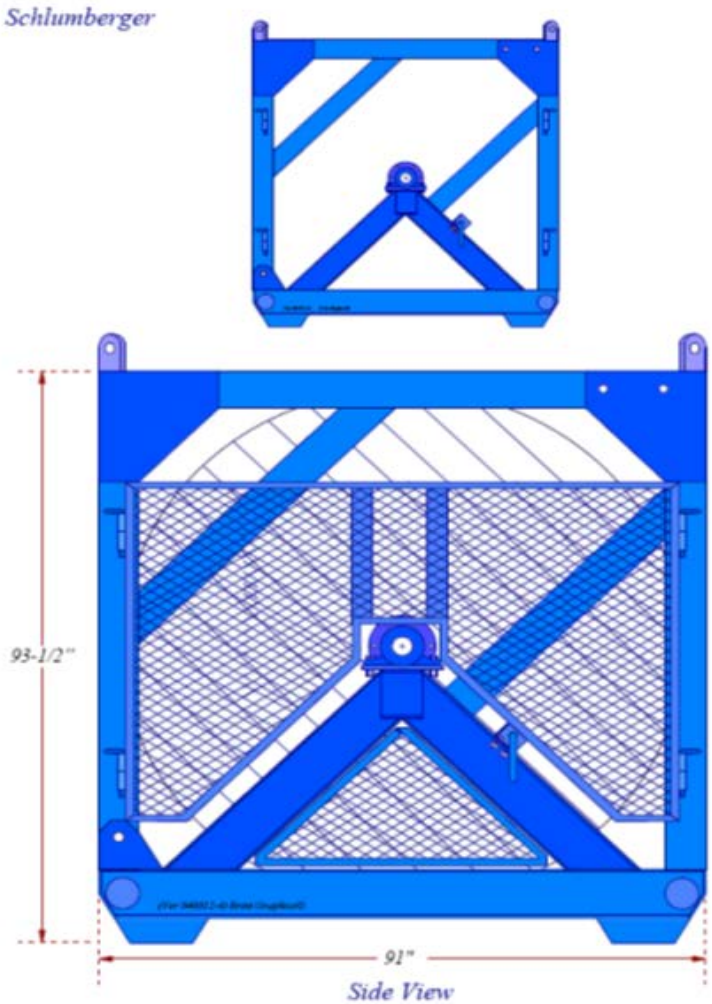

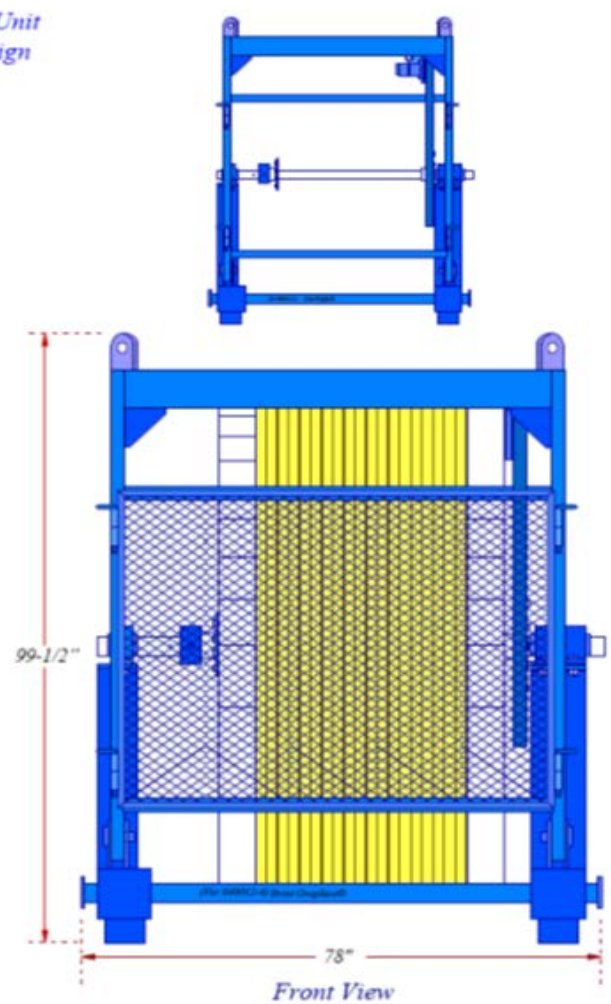

Schlumberger, Confidential. © Copyright 2011 Schlumberger, Unpublished Work. All rights reserved. This work contains the confidential and proprietary trade secrets of Schlumberger and may not be copied or stored in an information retrieval system, transferred, used, distributed, translated or retransmitted in any form or by any means, electronic or mechanical, in whole or in part, without the express written permission of the copyright owner.

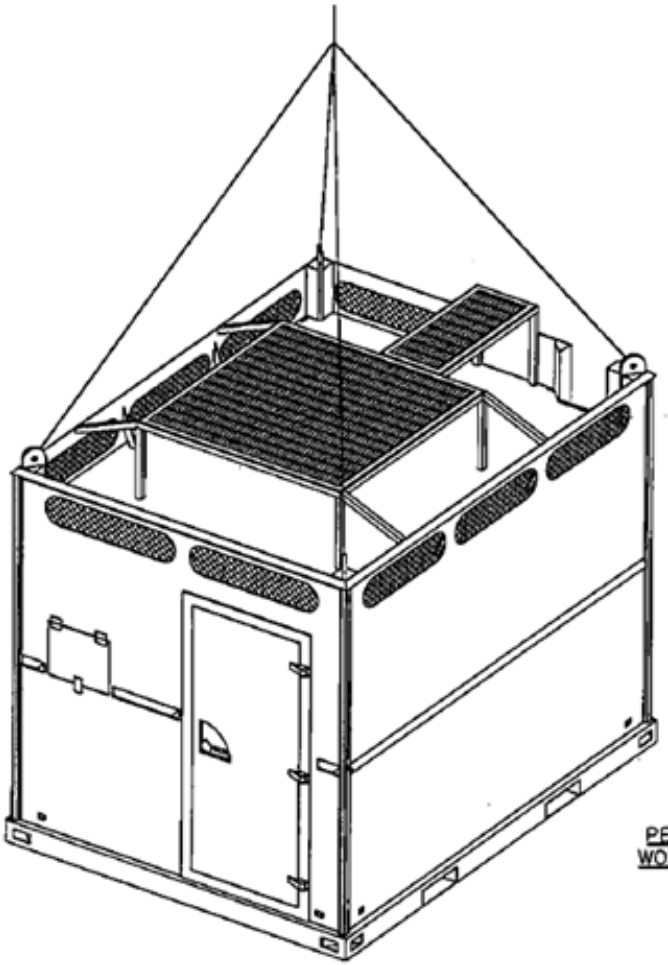

PERSONNEL WORKSTATION

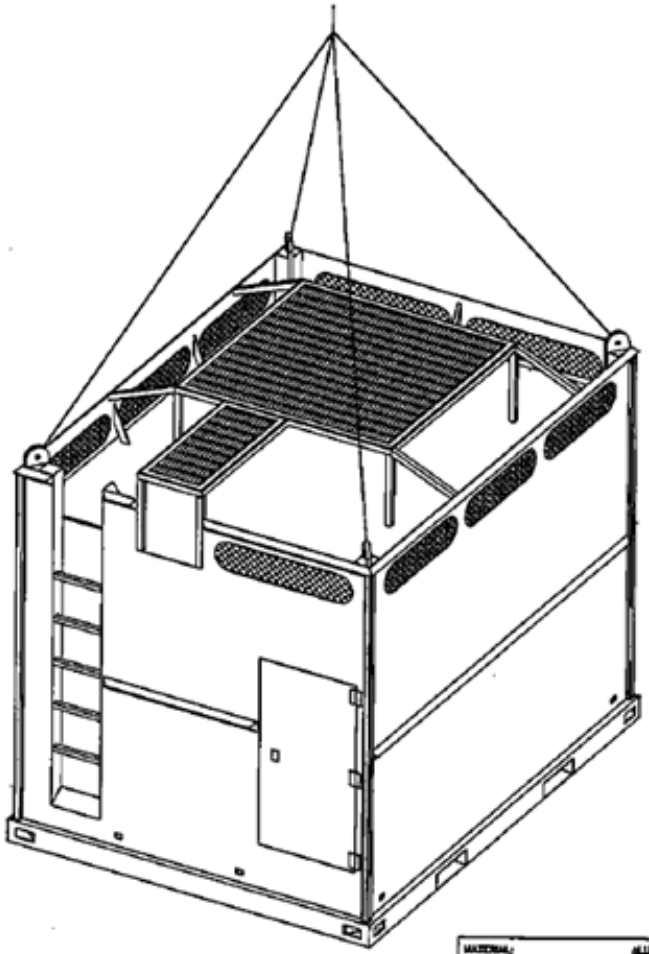

MATERIAL:	ALUMINUM
TARE WEIGHT (LBS):	900±
WORKING LOAD LIMIT (LBS):	11,500±
MAX. GROSS WEIGHT (LBS):	12,000

confidential and proprietary trade secrets of Schlumberger and may not be copied or stored in an information retrieval system, transferred, used, distributed, translated or retransmitted in any form or by any means, electronic or mechanical, in whole or in part, without the express written permission of the copyright owner.

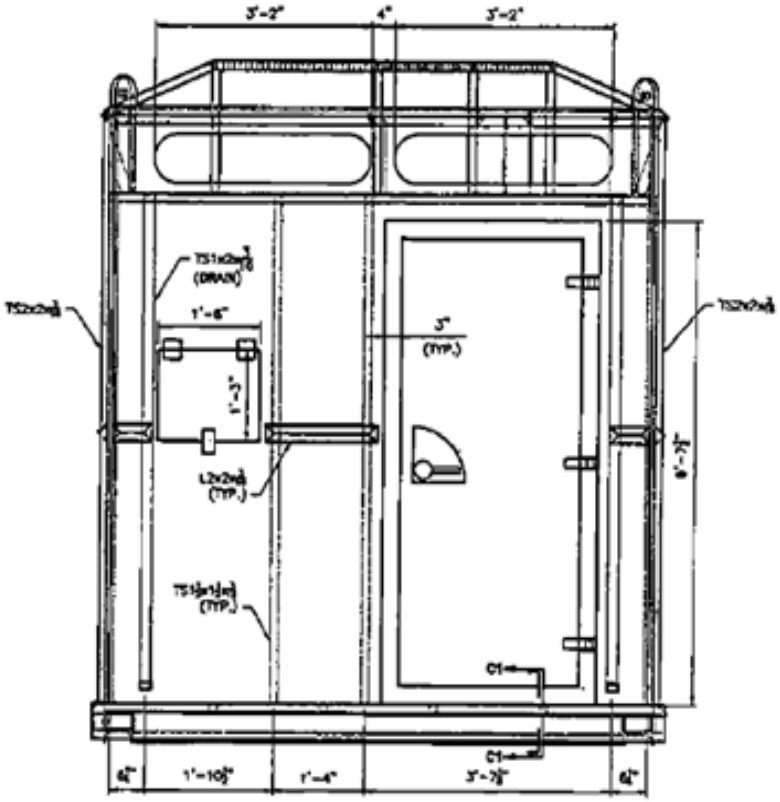

SECTION C–C
(LEFT VIEW)
SCALE: 1" = 1'-0"

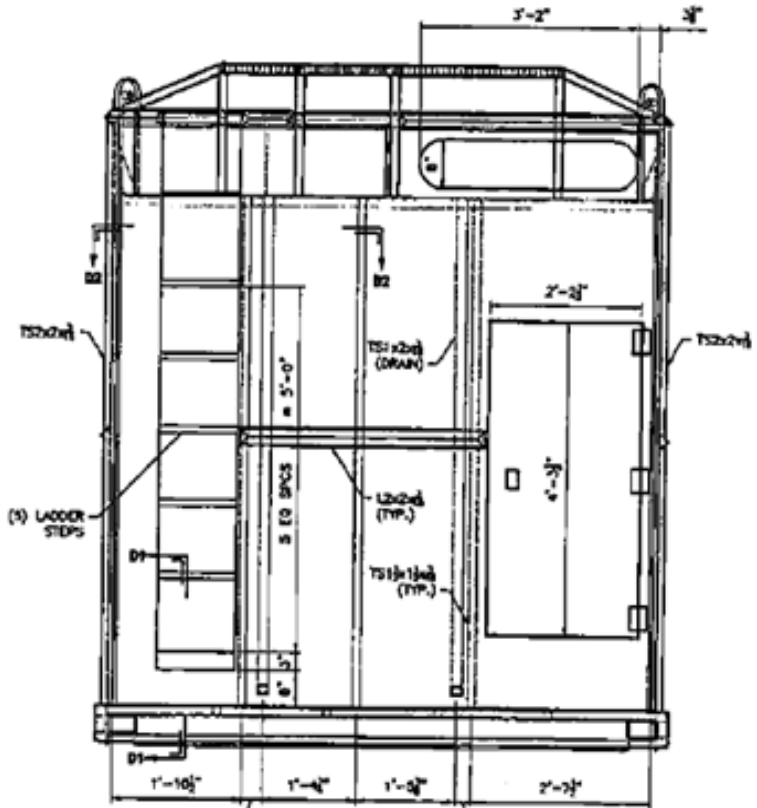

SECTION D–D
(RIGHT VIEW)
SCALE: 1" = 1'-0"

Schlumberger, Confidential. © Copyright 2011 Schlumberger, Unpublished Work. All rights reserved. This work contains the confidential and proprietary trade secrets of Schlumberger and may not be copied or stored in an information retrieval system, transferred, used, distributed, translated or retransmitted in any form or by any means, electronic or mechanical, in whole or in part, without the express written permission of the copyright owner.

Schlumberger

Northeast Natural Energy – MIP 3H

Neon Cable Wellhead Installation

Tubing hanger with ¼" Swageloks installed

Run bare line through Swagelok fitting, taking care that the nut, front and back Ferrules are placed correctly.

Tighten Swagelok hand tight then 1-1/4 turn with a wrench.

If an additional piece goes on top of hanger, thread lines as done and slowly lower the adapter into place.

Take care to not bend, crimp or pinch lines.

Install hanger into bowl, it should look something like this, keeping in mind there will only be one line.

Tubing bender (hard to see, special built by client and not shared) shown on Swagelok.

Start initial tubing bend at this point, it is hard to do this once it is seated in the bowl.

Taking care to not bend tubing sharply above Swagelok, which may result in damage to cable or Swagelok fitting

Wrap cable around casing hanger similar to example.

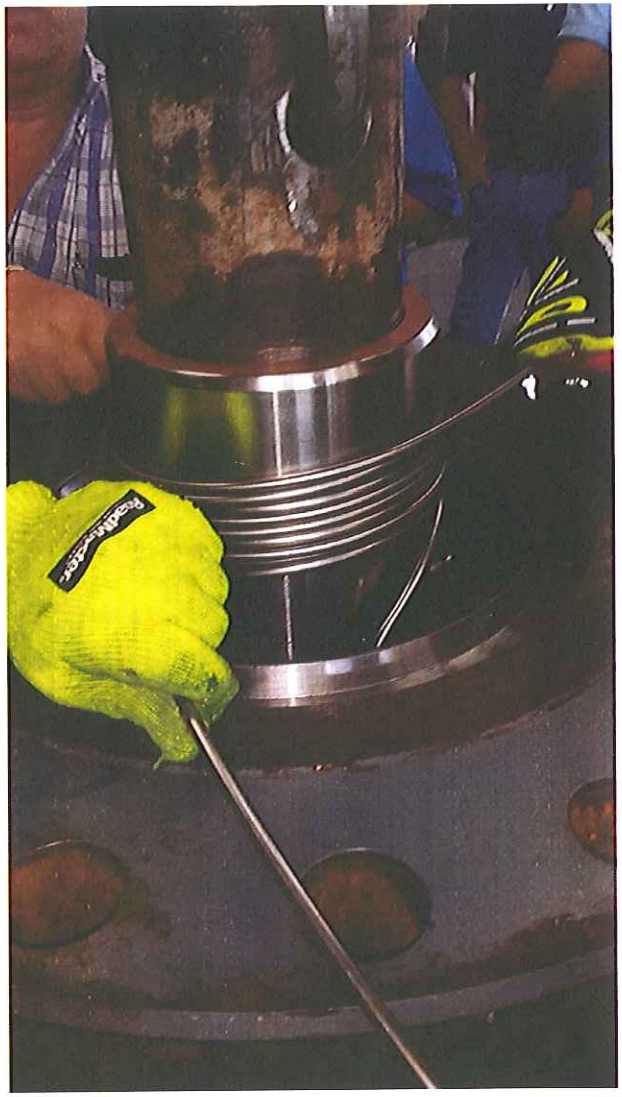

Tape cable to hanger to keep it from unwrapping.

In this case, the adapter flange for the instrument cables was raised and the control lines were run through the appropriate outlet holes.

Carefully continue down with flange keeping as little slack between flanges as possible.

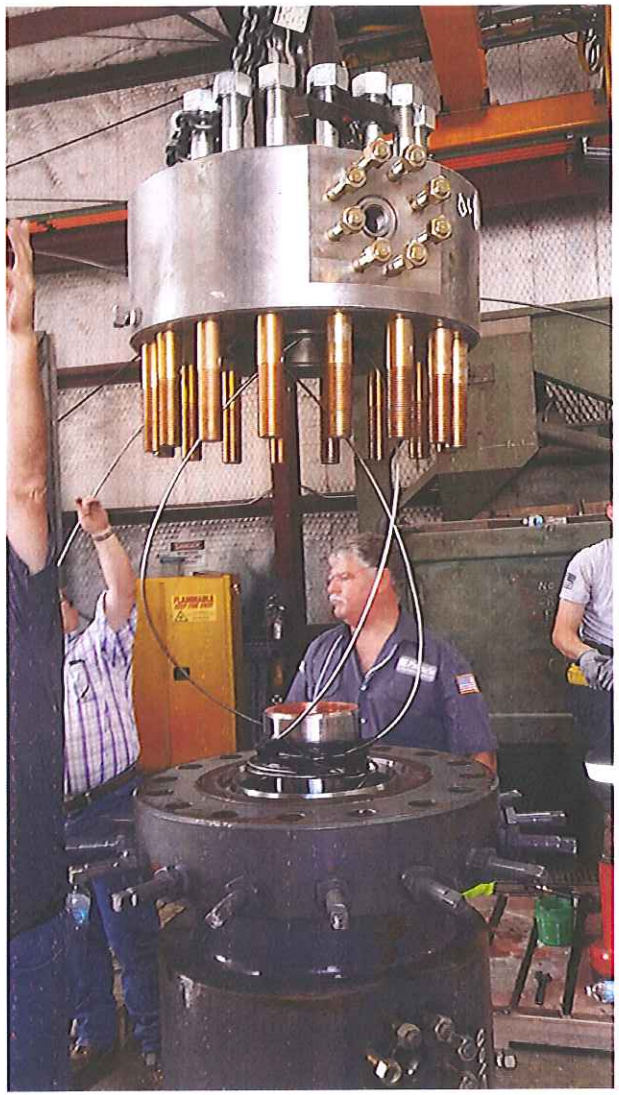

When flanges are seated, the cables should look something like this.

Northeast Natural Energy LLC

Proposed
MIP Unit No. 3H
Grant District
Monongalia County, WV

	PROPERTY OWNER	ACRES	LEASE NUMBER	PARCEL ID
A.	ENROUT PROPERTIES LLC	9.390		11-13G-36
B.	CONSOLIDATED GAS TRANSMISSION	0.380		11-13G-40
C.	ENROUT PROPERTIES LLC.	1.500		11-13G-37
D.	ENROUT PROPERTIES LLC.	1.203		11-13G-38
E.	W.V. RADIO CORPORATION	5.890		11-13G-39
F.	PHILLIP BURGE	1.470		11-13-104.2
G.	PHILLIP BURGE	1.810		11-13-102
H.	DANIEL & JENNIFER ERFURTH	1.000		11-13-101.1
I.	JOSEPH & JENNIE STOFFA	3.730		11-13-87
J.	JACK, JANET, JUDITH & BARBARA JAMISON	7.610		11-13-86

INTERNAL USE

UNIT BOUNDARY LINE COORDINATES (NAD83)

	NORTHING	EASTING	LATITUDE	LONGITUDE
1	403634.76	1832038.49	39.607180	79.984346
2	403699.51	1832131.09	39.607359	79.984019
3	403740.47	1832151.88	39.607472	79.983946
4	403824.54	1832125.02	39.607703	79.984043
5	403867.28	1832061.20	39.607819	79.984270
6	404987.39	1831490.68	39.610886	79.986317
7	405207.33	1831223.92	39.611486	79.987268
8	405530.16	1831359.83	39.612374	79.986791
9	406281.39	1830955.06	39.614430	79.988243
10	406826.39	1830089.32	39.615914	79.991326
11	406791.57	1830079.04	39.615818	79.991362
12	406450.33	1829840.32	39.614877	79.992203

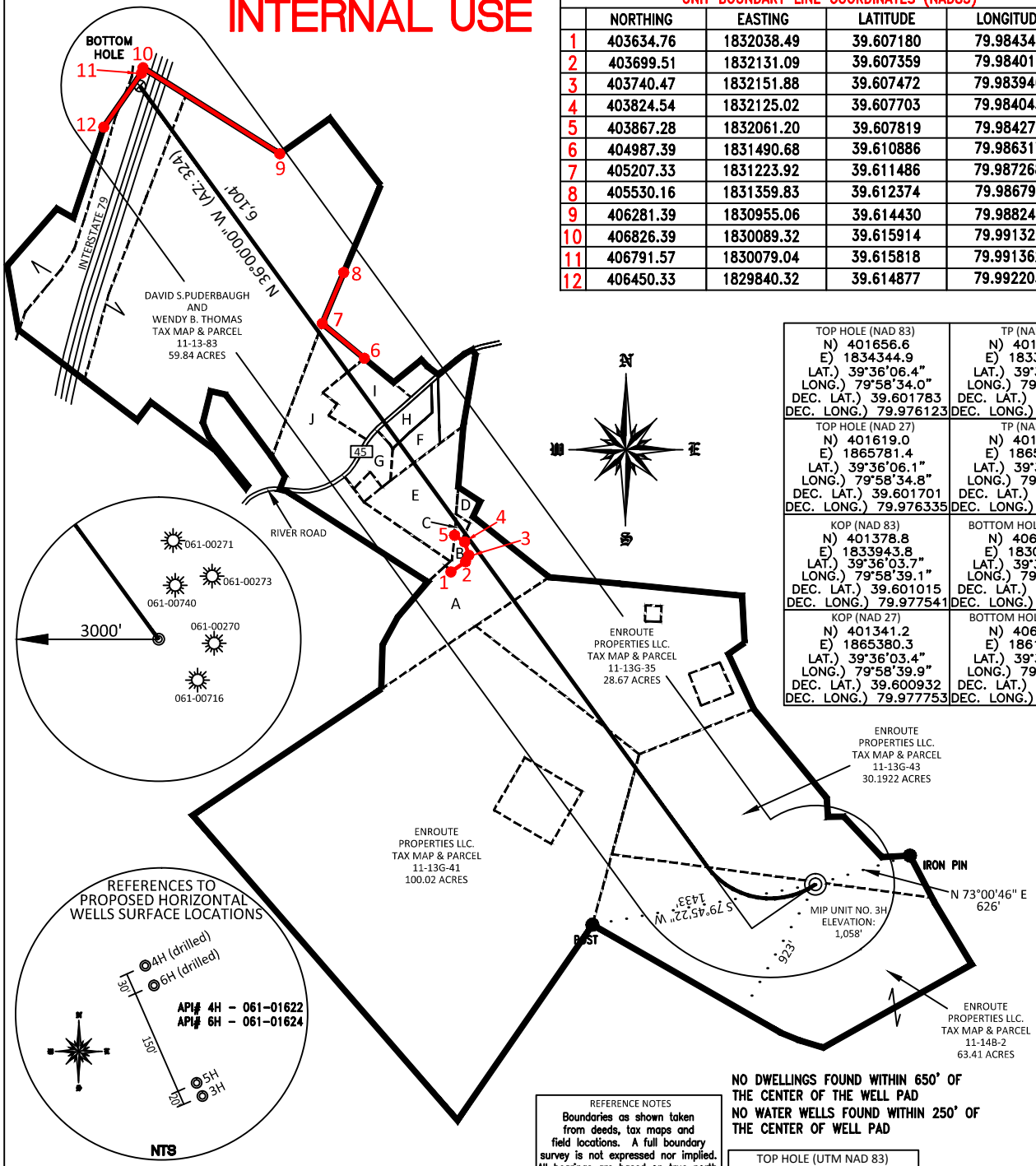

TOP HOLE (NAD 83)	TP (NAD 83)
N) 401656.6 E) 1834344.9 LAT.) 39°36'06.4" LONG.) 79°58'34.0" DEC. LAT.) 39.601783 DEC. LONG.) 79.976123	N) 401773.2 E) 1833657.3 LAT.) 39°36'07.5" LONG.) 79°58'42.8" DEC. LAT.) 39.602093 DEC. LONG.) 79.978566
TOP HOLE (NAD 27)	**TP (NAD 27)**
N) 401619.0 E) 1865781.4 LAT.) 39°36'06.1" LONG.) 79°58'34.8" DEC. LAT.) 39.601701 DEC. LONG.) 79.976335	N) 401735.6 E) 1865093.8 LAT.) 39°36'07.2" LONG.) 79°58'43.6" DEC. LAT.) 39.602011 DEC. LONG.) 79.678778
KOP (NAD 83)	**BOTTOM HOLE (NAD 83)**
N) 401378.8 E) 1833943.8 LAT.) 39°36'03.7" LONG.) 79°58'39.1" DEC. LAT.) 39.601015 DEC. LONG.) 79.977541	N) 406711.0 E) 1830069.7 LAT.) 39°36'56.1" LONG.) 79°59'29.0" DEC. LAT.) 39.615597 DEC. LONG.) 79.991394
KOP (NAD 27)	**BOTTOM HOLE (NAD 27)**
N) 401341.2 E) 1865380.3 LAT.) 39°36'03.4" LONG.) 79°58'39.9" DEC. LAT.) 39.600932 DEC. LONG.) 79.977753	N) 406673.5 E) 1861506.2 LAT.) 39°36'55.9" LONG.) 79°59'29.8" DEC. LAT.) 39.615515 DEC. LONG.) 79.991606

NO DWELLINGS FOUND WITHIN 650' OF THE CENTER OF THE WELL PAD
NO WATER WELLS FOUND WITHIN 250' OF THE CENTER OF WELL PAD

REFERENCE NOTES
Boundaries as shown taken from deeds, tax maps and field locations. A full boundary survey is not expressed nor implied. All bearings are based on true north. Ownership taken from public records Monongalia County, West Virginia SEPTEMBER 2014 State Plane Coordinates & NAD 83 Lat/Long by differential submeter mapping grade GPS Drafted by: E.A.M.

TOP HOLE (UTM NAD 83)
N) 4384061.3 E) 587904.3
BOTTOM HOLE (UTM NAD 83)
N) 4385579.5 E) 586576.0

BOORD, BENCHEK and ASSOC., INC.
Engineering, Surveying, Construction, and Mining Services
Southpointe, PA 15317 Phone: 724-746-1055

APRIL 28, 2015
SCALE 1"=1,000'

Northeast Natural

Borehole:	Well:	Field:	Structure:
ST01	MIP 3H	WV Monongalia County (NAD 83)	Patterson 254

Gravity & Magnetic Parameters

Model:	HDGM 2015	Dip:	66.866°	Date:	15-Jul-2015
MagDec:	-9.543°	FS:	52542.535nT	Gravity FS:	999.345mgn (9.80665 Based)

Surface Location NAD83 West Virginia State Plane, Northern Zone, US Feet

Lat:	N 39 36 6.42	Northing:	401656.6ftUS	Grid Conv:	-0.3037°
Lon:	W 79 58 34.04	Easting:	1834344.9ftUS	Scale Fact:	0.99994083

Miscellaneous

Slot:	MIP 3H	TVD Ref:	KB(1082ft above MSL)
Plan:	Northeast Natural MIP 3H ST01 Rev0 SLS 15Jul15		

Surface Location

Northing: 401656.6 Easting: 1834344.9 Latitude: N 39 36 6.42 Longitude: W 79 58 34.04 VSec Azimuth: 319.774

Target Description			Grid Coord						Local Coord	
Target Name	Shape	Dimension	Latitude	Longitude	Northing	Easting	TVD	VSec	N(+)/S(-)	E(+)/W(-)
MIP 5H East Curve 2	Polyline	N/A	N 39 36 6.60	W 79 58 34.15	401674.90	1834336.90	1082.00	19.14	18.30	-8.00
MIP 5H BHL Hardline	Polyline	N/A	N 39 36 6.60	W 79 58 34.15	401674.90	1834336.90	1082.00	19.14	18.30	-8.00
MIP 5H West Curve 2 Hardline	Polyline	N/A	N 39 36 6.60	W 79 58 34.15	401674.90	1834336.90	1082.00	19.14	18.30	-8.00
MIP 5H NE North Hardline	Polyline	N/A	N 39 36 6.60	W 79 58 34.15	401674.90	1834336.90	1082.00	19.14	18.30	-8.00
MIP 5H West Curve 1 Hardline	Polyline	N/A	N 39 36 6.60	W 79 58 34.15	401674.90	1834336.90	1082.00	19.14	18.30	-8.00
MIP 5H West Hardline	Polyline	N/A	N 39 36 6.60	W 79 58 34.15	401674.90	1834336.90	1082.00	19.14	18.30	-8.00
MIP 3H West Hardline	Polyline	N/A	N 39 36 6.42	W 79 58 34.04	401656.60	1834344.90	1082.00	0.00	0.00	0.00
MIP 5H East Curve 1 Hardline	Polyline	N/A	N 39 36 6.60	W 79 58 34.15	401674.90	1834336.90	1082.00	19.14	18.30	-8.00
MIP 3H East Hardline	Polyline	N/A	N 39 36 6.42	W 79 58 34.04	401656.60	1834344.90	1082.00	0.00	0.00	0.00
MIP 3H BHL Hard line	Polyline	N/A	N 39 36 6.42	W 79 58 34.04	401656.60	1834344.90	1082.00	0.00	0.00	0.00

PART	Seq.	Survey Tool/ Survey Tool Code	Vendor/Tool	Hole Size (in)	Casing Size (in)	MD From (ft)	MD To (ft)	Survey Frequency (ft)	EOU Size (Semi Major) (ft)	EOU Size (Semi Minor) (ft)	Comments/ Contingency
1	1	SLB_NSG+MSHOT		17.5	13.375	0	530	Act Stns	1.87	1.34	
1	2	SLB_NSG+MSHOT		12.25	9.625	530	1770	Act Stns	5.24	2.99	
1	3	SLB_NSG+MSHOT		8.75	5.5	1770	6312	Act Stns	13.49	3.5	
1	4	SLB_MWD-STD		8.75	5.5	6312	13925.26	1/100	190.07	12.61	

Critical Points

Critical Point	MD	INCL	AZIM	TVD	VSEC	N(+)/S(-)	E(+)/W(-)	DLS
Tie in/Build & Turn @ 8°/100' DLS	6312.00	0.79	329.34	6310.57	85.61	28.82	-98.49	
Landing Point	8029.26	90.00	324.00	7530.00	740.43	284.74	-809.88	8.00
MIP 3H BHL	13925.26	90.00	324.00	7530.00	6620.40	5054.71	-4275.46	0.00

From(ft)	To(ft)	Action
6312.00	6673.06	Curve 8.00°/100ft
		From inc 0.79° to 28.31°
		From Az 329.34° to 193.71°
		From 6310.57 ft TVD to 6657.39 ft TVD.
6673.06	6680.98	Drill Tangent
		Hold on inc 28.31°
		Hold on Az 193.71°
		From 6657.39 ft TVD to 6664.36 ft TVD.
6680.98	8029.26	Curve 8.00°/100ft
		From inc 28.31° to 90.00°
		From Az 193.71° to 324.00°
		From 6664.36 ft TVD to 7530.00 ft TVD.
8029.26	13925.26	Drill Tangent
		Hold on inc 90.00°
		Hold on Az 324.00°
		From 7530.00 ft TVD to 7530.00 ft TVD.

- Northeast Natural MIP 3H ST01 Rev0 SLS 15Jul15
- Northeast Natural MIP 3H Rev1 SLS 15Jul15
- Northeast Natural MIP 5H Rev1 SLS 26Jun15
- Northeast Natural MIP 5H Gyro+MWD 0ft to update
- Northeast Natural MIP 3H Gyro+MWD 0ft to update
- Northeast Natural MIP 6H Surveys 0ft to 10189ft Offset
- Northeast Natural MIP 4H Surveys 0ft to 11473ft Offset
- MIP 5H East Curve 2
- MIP 5H BHL Hardline
- MIP 5H West Curve 2 Hardline
- MIP 5H NE North Hardline
- MIP 5H West Curve 1 Hardline
- MIP 5H West Hardline
- MIP 3H West Hardline
- MIP 5H East Curve 1 Hardline
- MIP 3H East Hardline
- MIP 3H BHL Hard line

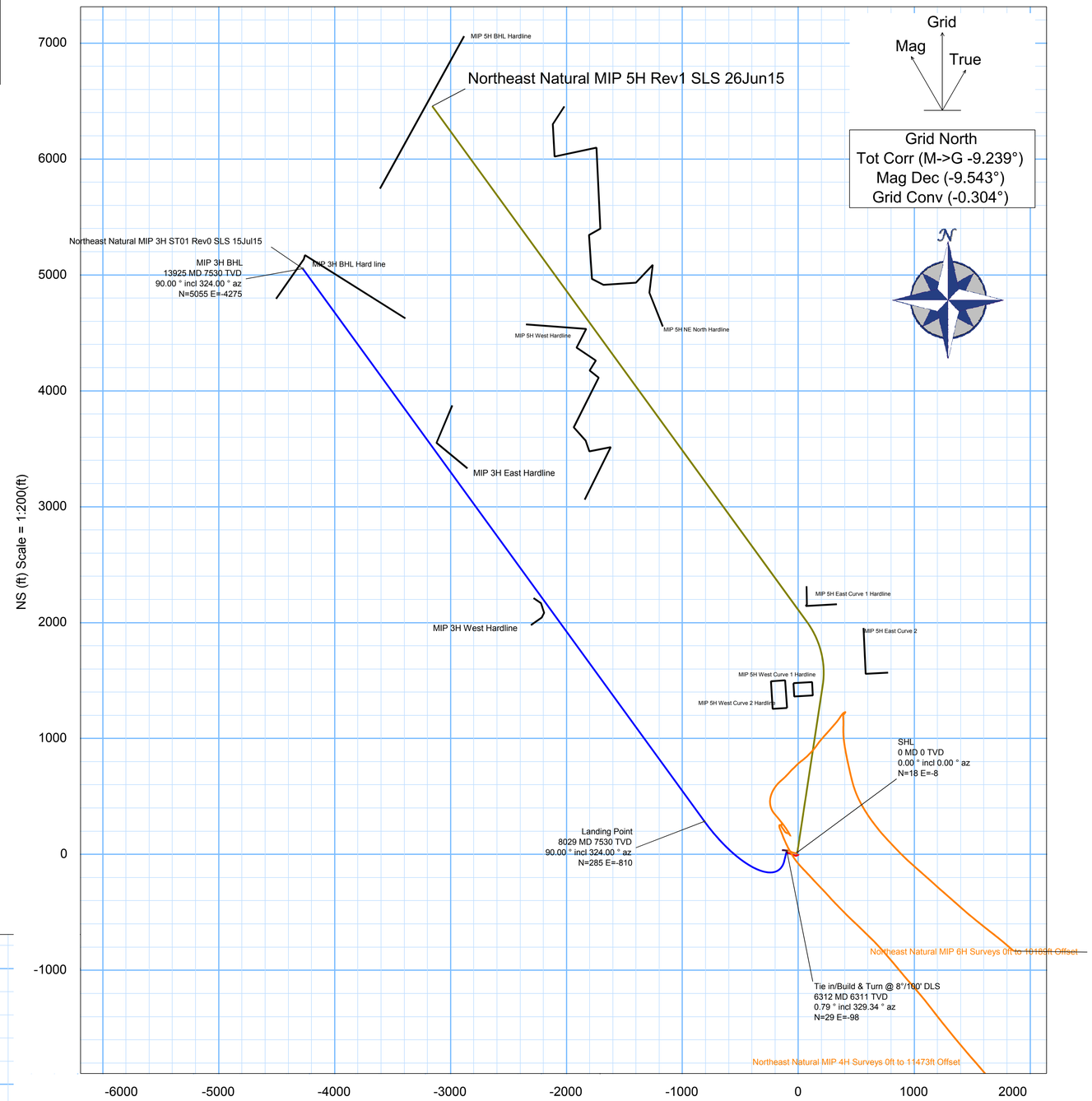

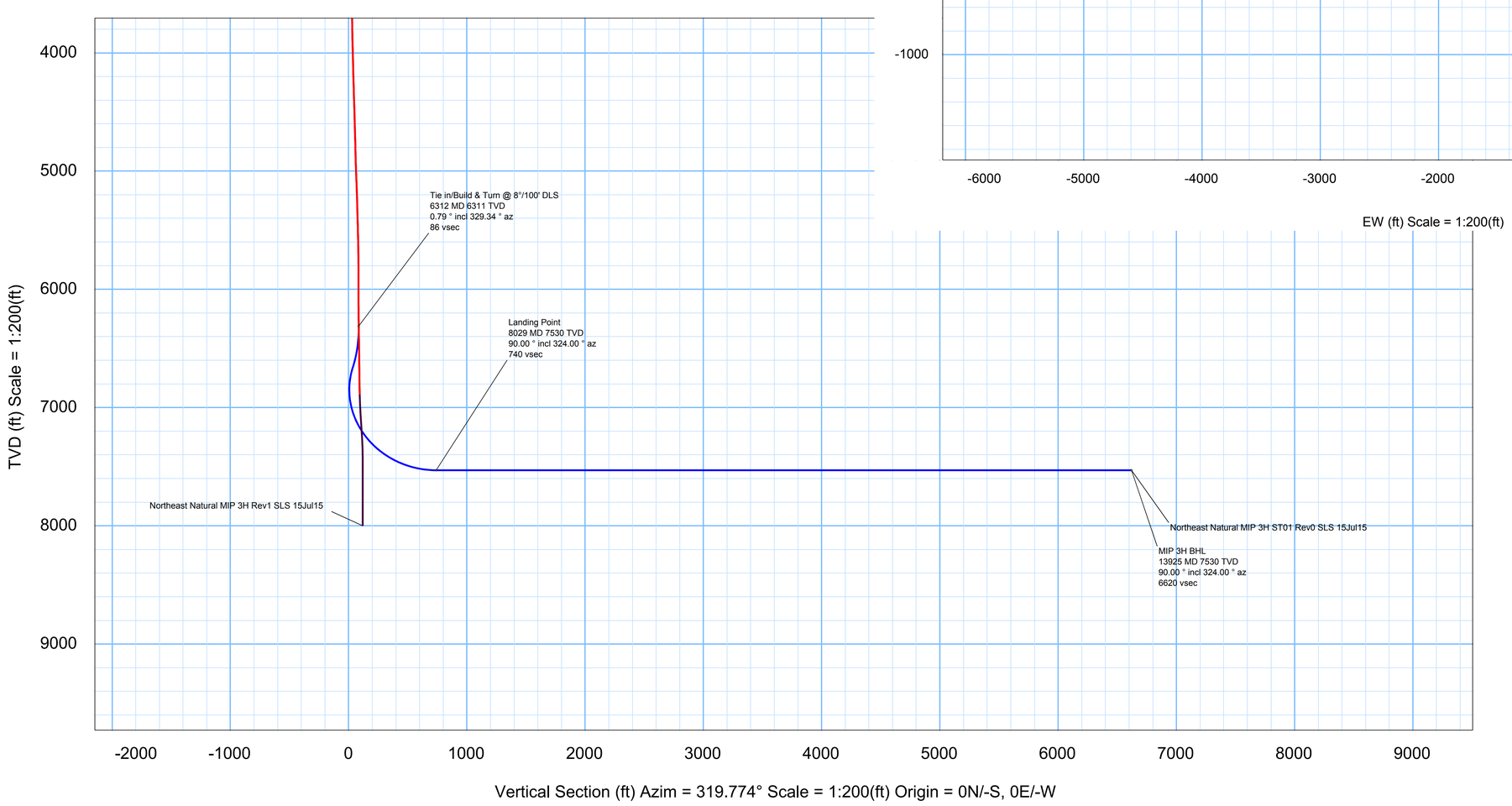

CONTROLLED

DEC	
Plan ref	Northeast Natural MIP 3H ST01 Rev0 SLS 15Jul15
Drawing ref	
Copy number	of 3
Date	16-Jul-2015

1	Drawn By	S. Shannon

Copy number for

Northeast Natural Energy

Geologic Prognosis

WELL NAME:	MIP PAD			DATE:	7/10/2015
STATE:	WV	COUNTY:	MONONGALIA	DISTRICT:	GRANT
				QUAD:	MORGANTOWN SOUTH

COORDINATES:		Latitude	Longitude	
	Top Hole	39° 36' 06.4"	79° 58' 34.0"	NAD 83
	Bottom Hole	-	-	

PERMIT NUMBER: -

GROUND ELEV (ft):	1058		CASING (ft):	
KB ELEV (ft):	1074		SURFACE:	682
			INTERMEDIATE:	1462
SHALLOW/DEEP COAL (ft):	300	630	PROJECTED TD (ft):	7534 TVD
SHALLOW/DEEP FRESH WTR (ft):	50	632		
SHALLOW/DEEP SALT WTR (ft):	1046	1412	ESTIMATED MAX PRESSURE (PSI):	3600

Directions to Well Site

Morgantown Industrial Park

FORMATION	Top MD	Base MD	COMMENTS	DRILLING HAZARDS	Top Subsea	TARGET ZONE
SAND,SHALE,COAL	0	1046			1074	
BIG INJUN	1046	1193			28	
BEREA	1193	1336			-119	
GANTZ	1336	1412			-262	
UPPER DEV SANDS	1860	3540			-786	
GENESEO	7182	7200			-6108	
TULLY	7200	7291			-6126	
HAMILTON	7291	7457			-6217	
UPPER MARCELLUS	7457	7524			-6383	
CHERRY VALLEY	7524	7527			-6450	
LOWER MARCELLUS	7527	7530			-6453	
TARGET	7530	7538			-6456	X
ONONDAGA	7558				-6484	

CUTTING SAMPLES:	YES:	NO:
(IF YES) FROM:	Every 30' to Tully top Every 30' thru curve Every 30' to TD (90' pics)	

****GAUGE ALL NATURAL SHOWS****

GAS CHECKS: Intermediate casing point, Top of Tully, thru Marcellus

GEOLOGIST:	EMILY JORDON		304-414-7085 office	(304) 389-8564 cell
ENGINEER:	JAY HEWITT	cell 304-382-1825	IAN COSTELLO	cell 304-610-9764

LOGGING COMPANY : TBD

DRILLING RIG: TBD

Revised Date 7/29/2015

Northeast Natural Energy
AFE Summary

Well:	MIP 3H	Proposed TD:	12,240	Target Formation:	Marcellus
Field:	Morgantown	Proposed TVD:	7,528	Orginal Date:	4/30/2015
Location:	Mon WV	Lateral Length:	5,691	Stage Spacing:	200

Intangible	Cost	Tangible	Cost
Pre-Drilling	$100,500	Pre-Drilling	$70,000
Top Hole	$512,000	Top Hole	$70,400
Horizontal	$994,100	Horizontal	$313,400
Completions	$2,194,500	Completions	$44,800
Drill out and Flowback	$270,100	Drill out and Flowback	
Surface Equipment	$118,100	Surface Equipment	$133,600
Total	$4,189,300	Total	$632,200

	Dry Hole Cost		Completions Cost
Total Pre-Drilling	$170,500	Total Completions	$2,239,300
Total Top Hole	$582,400	Total Drill out and Flowback	$270,100
Total Horizontal	$1,307,500		
Total Surface Equipment	$251,700		
Total	$2,312,100	Total	$2,509,400

Company	WI%	Gross Total	Net Cost
Northeast	100%	$4,821,500	$4,821,500
DOE	100%	$2,320,400	

Written by: Jay Hewitt

*This AFE represents only the estimated costs, and shall not supercede the terms of the Operating Agreement