Top Hole Drilling Procedure

northeast
NATURAL ENERGY

MIP 3H
Horizontal Marcellus Well
Drilling Procedure
API Number: 47-061-01707
AFE: 100333-602
6-29-15

At a Glance

	Hole Size	Size	Grade	#/ft	Drill Depth	Casing Depth
Conductor	28"	24"	NA		50	50
Surface	17 1/2"	13 3/8"	J-55	54.5	530'	500'
Intermediate	12 1/4"	9 5/8"	J-55	40	1,800'	1,770'
Production	8 3/4"	5 1/2"	P-110	20	14,032'	14,000'

	MD	TVD
End Air	6,300	6,300
KOP	6,335	6,335
LP	8,057	7,534
TD	14,032	7,534
Lateral	5,975	
Lowest SF	1.42 MIP 5H	

Elevation	**1,058'**
KB	14'

Latitude	**39.601783**
Longitude	79.976335

Northeast Natural Energy Primary Contacts

Jay Hewitt – Drilling Manager – jhewitt@nne-llc.com – (304) 382-1825
Ian Costello – Completions Engineer – icostello@nne-llc.com – (304) 610-9764
Zack Arnold – GM Operations – zarnold@nne-llc.com – (304) 203-8059
Hollie Medley – Regulatory Coordinator – hmedley@nne-llc.com - (304) 241-5752 x 7108
Brett Loflin – VP Regulatory – bloflin@nne-llc.com - (304) 414-7063

Emergency / Compliance

Refer to Emergency Response Plan for emergency protocols and contact information

Inspector – Gayne Knitowski (304) 546-8171 Gayne.J.Knitowski@wv.gov
MECCA- Michael Fortney (681) 209-5217 mfortney@mecca911.org
MECCA- Michael Wolfe (304) 598-0301
Emergency Services - Dial 911 (For Emergency Use Only)

_____ John Adams, VP Operations

_____ Brett Loflin, VP Regulatory Affairs

_____ BJ Carney, VP Geoscience

_____ Sam Sommerville, VP Finance

_____ Jeannie Johnson, VP Land Operations

_____ Zack Arnold, GM Operations

_____ Matt Daniel, Landman

_____ Hollie Medley, Regulatory Coordinator

Introduction

NNE is dedicated to developing a safe and healthy environment for all employees and contractors through the combination of engineering design, practicality, and a hands on approach. Moreover, NNE is committed to protecting our natural environment and maintains a strong anti-pollution and spill prevention program in all areas where it conducts business. The objective of this procedure is to act as a guide to drill the top hole section of the well while following all of NNE's core values.

Safety & Environmental

1. Pre-job safety meetings are to be held at the beginning of each shift and prior to any changes in operating conditions/procedures during a shift throughout the course of all operations.
2. All crews on location must have the same relief times to provide an accurate head count on location and uniform hand-over procedures and directions.
3. PJSM topics should encompass NNE core values, **stop work authority**, PPE requirements, muster areas, specific site concerns, notification processes, and specific operational concerns.
4. During PJSM, discuss NNE JSA and distribute for signature amongst all crew members. JSA must be completed relative to specific job hazards for operation.
5. NNE JSA does not replace contractor JSA. Each contractor JSA must be signed off on and collected by NNE supervisor before work may commence.
6. Any non-transient visitor to the pad not present for initial safety meeting, must report to company man upon arrival for sign-in on NNE JSA and briefing of site hazards. Non-transient visitors are defined as anyone that will leave a ten foot perimeter of their vehicle or may come within one-hundred feet of wellhead, production, or operating equipment.
7. A daily environmental inspection is required by supervisors and a NNE Environmental Checklist must be completed detailing inspection. When two supervisors are splitting oversight of an operation, the daytime supervisor is responsible for inspection/completion of such forms.
8. If an environmental/safety incident or near miss occurs, notify the NNE supervisor immediately and follow guidelines in provided Site Safety Plan for response. Complete incident report for documentation of the incident, and send to office for review.
9. All safety information, forms, JSAs, environmental checklists, and incident reports must be contained in a folder, separated daily, and turned in to NNE supervisor at the end of operations.
10. Make note of all safety meetings and incidents in daily reports.
11. During simultaneous operations, make sure that all parties performing work on the pad attend safety meetings and their presence is documented.

Pre-Rig Vertical move

1. Get permit for well.
2. Make sure E&S controls are in place and a paper copy is in the mail box.
3. Call DEP and MEECA to set up a Pre-spud meeting 48 hours in advance.
4. Hold pre-spud meeting.
5. Call and email DEP with rig move date 24 hours before the move. Gayne.J.Knitowski@wv.gov and DEPOOGNotify@WV.gov

northeast NATURAL ENERGY

6. Move or skid US Energy 9 to location with site liner crews on location to fix plastic as needed.
7. Have copy of Permit, Site Reclamation Plan, and Well site 911 Address in the company man shack.
8. Move rig onto well adjusting the flow line as needed.

Surface Hole

1. RU electronic survey equipment. Surveys are to be taken at 500' intervals and at casing point. Correct azimuth to NAD 83.
2. Ensure rig crew maintains a detailed Driller's Log that records formation types/tops, fresh/salt water flow depths and size, and any shows of gas/oil and depths.
3. Company-men are responsible for safety, environmental, regulatory compliance, location housekeeping, daily inspecting all pits and ensure at least a 3' freeboard is maintained and maintaining E&S controls. Record all of these in the morning report.
4. NU 24" x 20" swedge NU air bowl on 20" swedge.
5. RU closed loop for air portion.
6. Drill 17-1/2" hole to 530' on air/mist with hammer bit.

Recommended BHA:

a. 6- 6 1/2" Drill Collars
b. 2- 8" Drill Collars
c. 1- 8" Monel Drill Collar
d. 1- 11" Air Hammer
e. 1- 17 1/2" Flat Bottom Hammer Bit Open Jets

Recommended Drilling Parameters:

a. 4,000 cfm air rate
b. 6 klb WOB
c. 35 RPM

As a contingency have a 17-1/2" rock bit and spud mud additives on location in the event the hammer is pulled due to water influx.

7. Circulate the hole clean and fill the hole with brine. TOOH while strapping the pipe.
8. Notify Oil & Gas Inspector 24 hours prior to running casing and cement.
9. Hold pre-job safety meeting (PJSM) and RU Power Tongs.
10. Run and cement 13-3/8" 54.5.0# J-55 8RD ST&C surface casing as follows MU torque is 5140 ft-lbs (utilize API modified thread compound).
11. Float equipment: Float shoe, float collar at top of 1st joint (thread lock shoe and one (1) joint above).
12. Centralizer placement is one above float shoe and one on every third joint to surface with bow spring centralizers.
13. Use a landing joint for proper spacing.
14. Cement Blend from Baker is a Class A with 2% CaCl2 + 0.25 pps Cello Flake yield = 1.18 ft3/sx)
    a. Planned TOC: Surface
    b. Cement excess: 30%
    c. Spacers: 10 bbls FW, 25 bbls of 6% Gel Conditioner, and 10 bbls FW.
    d. Mix and pump cement at 4-6 bpm (or as needed to maintain density).
    e. Displace cement at 7-8 bpm (or as high a rate as possible).

If there are no cement returns to surface call NNE company man and DEP then perform a top out job. Otherwise, WOC for eight (8) hours (record WOC time on the morning report). LD landing joint.

15. Submit casing tally and cement report to office after job.
16. Weld on Cameron 3k traditional well head to proper height according to the attached well head diagram.
17. Prepare to NU and test BOP's and choke manifold. NU spacer spool(s) and rig's 13" 5M BOP & rotating head. Test annular to 250 psi low / 3,500 psi high

Intermediate Hole

1. Stage in hole with 12-1/4" Tri-cone and unload water. Drill out 13-3/8" plug and shoe.
2. Drill 12-1/4" hole to TD with a hammer.

Recommended BHA:

a. 6- 6 1/2" Drill Collars
b. 2- 8" Drill Collars
c. 1- 8" Monel Drill Collar
d. 1- 11" Air Hammer
e. 1- 12 1/4" Flat Bottom Hammer Bit Open Jets

Recommended Drilling Parameters:

a. 4,000 cfm air rate
b. 6 klb WOB
c. 35 RPM

As a contingency have a 12-1/4" rock bit on location in the event the hammer is pulled.

3. TD for this section through any red rock and salt water zones and below base of Gantz sand (last expected salt water).
4. Mist with KCl and chemicals if needed.
5. Take Directional Surveys every 500' and at TD to check deviation and azimuth. Report corrected azimuth in NAD 83.
6. Drill to 1,800' and then load hole with gel or KCl.
7. Rig up wireline and run logs to TD.
8. TOOH while strapping out of the hole and stand back DP and DC's.
9. Notify the Oil & Gas Inspector 24 hours prior to running casing and cementing.
10. Hold PJSM & RU power tongs
11. Run 9-5/8" 40# J55 LTC intermediate casing
12. MU torque: 4530 ft-lbs (utilize API modified thread compound)
13. Float equipment is a float shoe and float collar.
14. Thread lock entire float track and one joint above
15. Centralizer placement is one above float shoe and one every 3rd joint to surface with bow spring centralizers
16. Use a landing joint for proper space-out and land out on mandrel hanger per Cameron running procedure.
17. Cement blend from Baker is Class A + 1% CaCl2
    a. Planned TOC: Surface
    b. Cement excess: 30% open hole.
    c. Spacers: 25 bbls of 6% Bentonite Conditioner pre-flush, 10 bbls FW.
    d. Displace (reduce rate as plug approaches float collar).
    e. Mix & pump cement at 4-6 bpm (or as needed to maintain density).
    f. Displace cement at 7-8 bpm (or as high a rate as possible).
    g. Submit casing tally and cement report to office after job..
18. Submit casing tally and cement report to office after job.
19. Weld on Cameron 5k traditional well head to proper height according to the attached well head diagram.

Northeast NATURAL ENERGY

20. Prepare to NU and test BOP's and choke manifold. NU spacer spool(s) and rig's 13" 5M BOP & rotating head. Test annular to 250 psi low / 3,500 psi high

8 ¾" Vertical Hole

1. Hold pre-job safety meeting (PJSM).
2. Install wear bushing.
3. Drill 8-3/4" hole to TD with a hammer. TD will be 6,300'.

Recommended BHA:

a. 10- 6 1/2" Drill Collars
b. 1- 8" Air Hammer
c. 1- 8 3/4" Flat Bottom Hammer Bit Open Jets

Recommended Drilling Parameters:

a. 4,000 cfm air rate
b. 6 klb WOB
c. 35 RPM

4. Take directional surveys every 500'
5. As a contingency, have 8-3/4" Hughes XL30 rock bit on location in the event the hammer is pulled.
6. Circulate hole clean.
7. Fill hole with brine.
8. TOOH while strapping pipe.
9. Rig down US Energy 9 and closed loop equipment.

northeast
NATURAL ENERGY

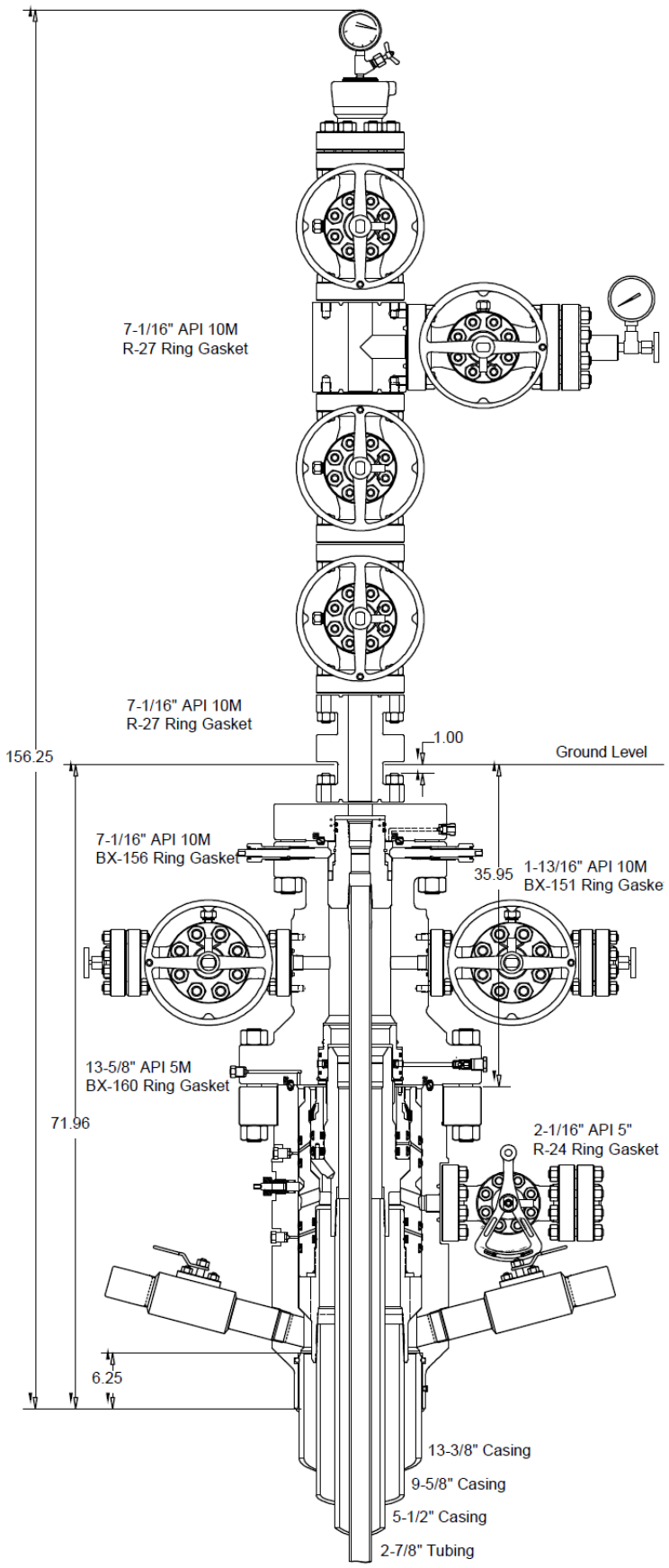
7-1/16" API 10M
R-27 Ring Gasket
7-1/16" API 10M
R-27 Ring Gasket
156.25
1.00
Ground Level
7-1/16" API 10M
BX-156 Ring Gasket
35.95
1-13/16" API 10M
BX-151 Ring Gaske
13-5/8" API 5M
BX-160 Ring Gasket
71.96
2-1/16" API 5"
R-24 Ring Gasket
6.25
13-3/8" Casing
9-5/8" Casing
5-1/2" Casing
2-7/8" Tubing

Northeast Natural Energy LLC

Proposed
MIP Unit No. 3H
Grant District
Monongalia County, WV

	PROPERTY OWNER	ACRES	LEASE NUMBER	PARCEL ID
A.	ENROUT PROPERTIES LLC	9.390		11-13G-36
B.	CONSOLIDATED GAS TRANSMISSION	0.380		11-13G-40
C.	ENROUT PROPERTIES LLC.	1.500		11-13G-37
D.	ENROUT PROPERTIES LLC.	1.203		11-13G-38
E.	W.V. RADIO CORPORATION	5.890		11-13G-39
F.	PHILLIP BURGE	1.470		11-13-104.2
G.	PHILLIP BURGE	1.810		11-13-102
H.	DANIEL & JENNIFER ERFURTH	1.000		11-13-101.1
I.	JOSEPH & JENNIE STOFFA	3.730		11-13-87
J.	JACK, JANET, JUDITH & BARBARA JAMISON	7.610		11-13-86

INTERNAL USE

UNIT BOUNDARY LINE COORDINATES (NAD83)

	NORTHING	EASTING	LATITUDE	LONGITUDE
1	403634.76	1832038.49	39.607180	79.984346
2	403699.51	1832131.09	39.607359	79.984019
3	403740.47	1832151.88	39.607472	79.983946
4	403824.54	1832125.02	39.607703	79.984043
5	403867.28	1832061.20	39.607819	79.984270
6	404987.39	1831490.68	39.610886	79.986317
7	405207.33	1831223.92	39.611486	79.987268
8	405530.16	1831359.83	39.612374	79.986791
9	406281.39	1830955.06	39.614430	79.988243
10	406826.39	1830089.32	39.615914	79.991326
11	406791.57	1830079.04	39.615818	79.991362
12	406450.33	1829840.32	39.614877	79.992203

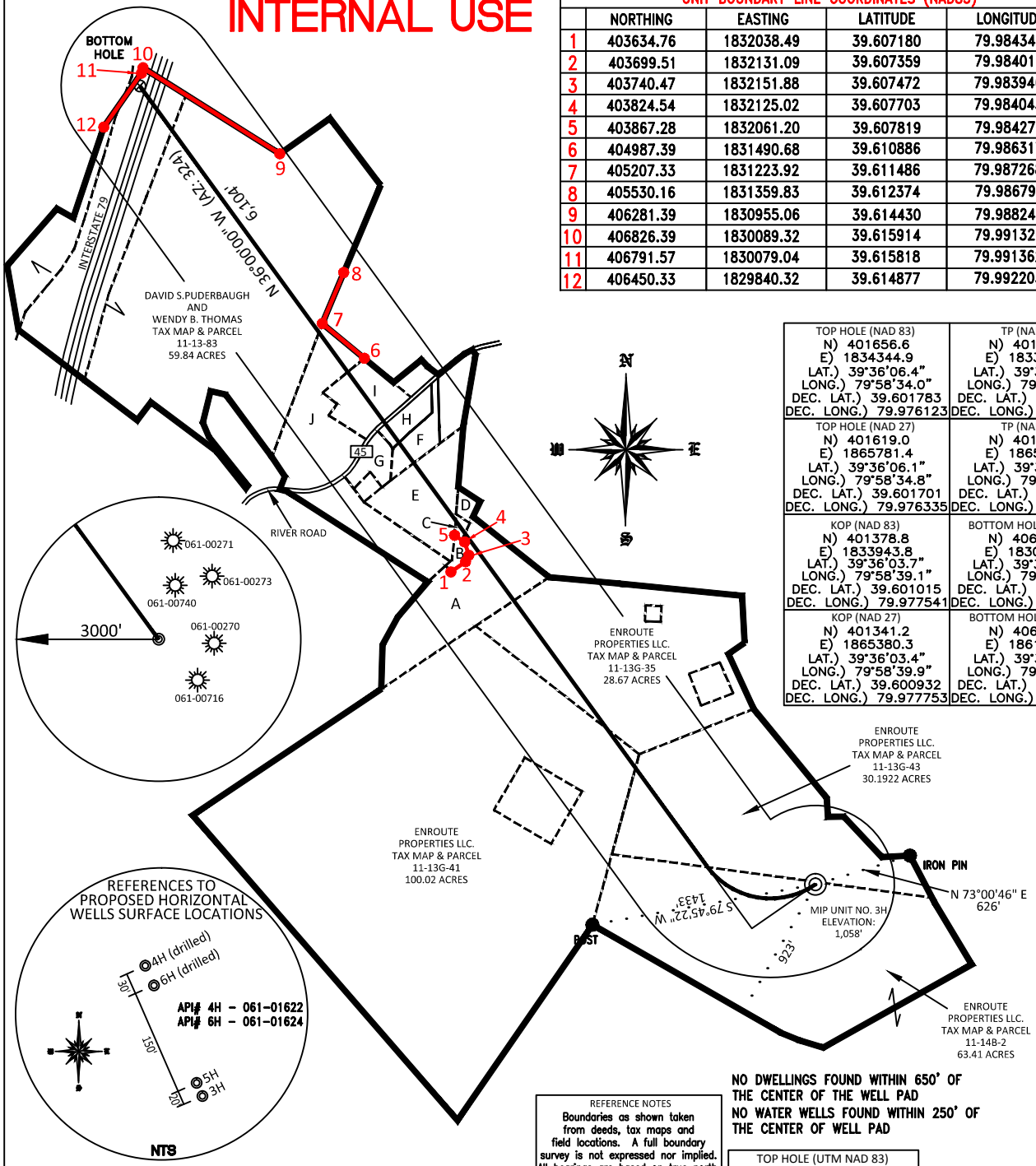

TOP HOLE (NAD 83)	TP (NAD 83)
N) 401656.6 E) 1834344.9 LAT.) 39°36'06.4" LONG.) 79°58'34.0" DEC. LAT.) 39.601783 DEC. LONG.) 79.976123	N) 401773.2 E) 1833657.3 LAT.) 39°36'07.5" LONG.) 79°58'42.8" DEC. LAT.) 39.602093 DEC. LONG.) 79.978566
TOP HOLE (NAD 27)	**TP (NAD 27)**
N) 401619.0 E) 1865781.4 LAT.) 39°36'06.1" LONG.) 79°58'34.8" DEC. LAT.) 39.601701 DEC. LONG.) 79.976335	N) 401735.6 E) 1865093.8 LAT.) 39°36'07.2" LONG.) 79°58'43.6" DEC. LAT.) 39.602011 DEC. LONG.) 79.678778
KOP (NAD 83)	**BOTTOM HOLE (NAD 83)**
N) 401378.8 E) 1833943.8 LAT.) 39°36'03.7" LONG.) 79°58'39.1" DEC. LAT.) 39.601015 DEC. LONG.) 79.977541	N) 406711.0 E) 1830069.7 LAT.) 39°36'56.1" LONG.) 79°59'29.0" DEC. LAT.) 39.615597 DEC. LONG.) 79.991394
KOP (NAD 27)	**BOTTOM HOLE (NAD 27)**
N) 401341.2 E) 1865380.3 LAT.) 39°36'03.4" LONG.) 79°58'39.9" DEC. LAT.) 39.600932 DEC. LONG.) 79.977753	N) 406673.5 E) 1861506.2 LAT.) 39°36'55.9" LONG.) 79°59'29.8" DEC. LAT.) 39.615515 DEC. LONG.) 79.991606

NO DWELLINGS FOUND WITHIN 650' OF THE CENTER OF THE WELL PAD
NO WATER WELLS FOUND WITHIN 250' OF THE CENTER OF WELL PAD

REFERENCE NOTES
Boundaries as shown taken from deeds, tax maps and field locations. A full boundary survey is not expressed nor implied. All bearings are based on true north. Ownership taken from public records Monongalia County, West Virginia SEPTEMBER 2014 State Plane Coordinates & NAD 83 Lat/Long by differential submeter mapping grade GPS Drafted by: E.A.M.

TOP HOLE (UTM NAD 83)
N) 4384061.3 E) 587904.3
BOTTOM HOLE (UTM NAD 83)
N) 4385579.5 E) 586576.0

BOORD, BENCHEK and ASSOC., INC.
Engineering, Surveying, Construction, and Mining Services
Southpointe, PA 15317 Phone: 724-746-1055

APRIL 28, 2015
SCALE 1"=1,000'

Northeast Natural

Borehole:	Well:	Field:	Structure:
Original Borehole	MIP 3H	WV Monongalia County (NAD 83)	Patterson 254

Gravity & Magnetic Parameters

Model:	HDGM 2015	Dip:	66.872°	Date:	19-Jun-2015
MagDec:	-9.54°	FS:	52551.125nT	Gravity FS:	999.345mgn (9.80665 Based)

Surface Location NAD83 West Virginia State Plane, Northern Zone, US Feet

Lat:	N 39 36 6.42	Northing:	401656.6ftUS	Grid Conv:	-0.3037°
Lon:	W 79 58 34.04	Easting:	1834344.9ftUS	Scale Fact:	0.99994083

Miscellaneous

Slot:	MIP 3H	TVD Ref:	KB(1082ft above MSL)
Plan:	Northeast Natural MIP 3H Rev0 SLS 18Jun15		

Surface Location

Northing: 401656.6 Easting: 1834344.9 Latitude: N 39 36 6.42 Longitude: W 79 58 34.04 VSec Azimuth: 319.774

Target Description			Grid Coord						Local Coord	
Target Name	Shape	Dimension	Latitude	Longitude	Northing	Easting	TVD	VSec	N(+)/S(-)	E(+)/W(-)
MIP 3H West Hardline	Polyline	N/A	N 39 36 6.42	W 79 58 34.04	401656.60	1834344.90	1082.00	0.00	0.00	0.00
MIP 3H East Hardline	Polyline	N/A	N 39 36 6.42	W 79 58 34.04	401656.60	1834344.90	1082.00	0.00	0.00	0.00
MIP 3H BHL Hard line	Polyline	N/A	N 39 36 6.42	W 79 58 34.04	401656.60	1834344.90	1082.00	0.00	0.00	0.00
MIP 3H KOP	Point	N/A	N 39 36 3.65	W 79 58 39.15	401378.80	1833943.80	6006.00	46.93	-277.82	-401.13
MIP 3H TP	Point	N/A	N 39 36 7.54	W 79 58 42.84	401773.20	1833657.30	7534.00	533.11	116.61	-687.64
MIP 3H BHL	Point	N/A	N 39 36 56.15	W 79 59 29.02	406711.00	1830069.70	7534.00	6620.40	5054.71	-4275.46

PART	Seq.	Survey Tool/ Survey Tool Code	Vendor/Tool	Hole Size (in)	Casing Size (in)	MD From (ft)	MD To (ft)	Survey Frequency (ft)	EOU Size (Semi Major) (ft)	EOU Size (Semi Minor) (ft)	Comments/ Contingency
1	1	SLB_MWD-STD-Depth Only		30	30	0	24	1/100	1.25	1.25	
1	2	SLB_MWD-STD		30	30	24	14032.41	1/100	195.46	22.68	

Critical Points

Critical Point	MD	INCL	AZIM	TVD	VSEC	N(+)/S(-)	E(+)/W(-)	DLS
SHL	0.00	0.00	199.28	0.00	0.00	0.00	0.00	
KOP - Build @ 8°/100' DLS	6335.00	0.00	199.28	6335.00	0.00	0.00	0.00	0.00
Landing Point	8057.41	90.00	324.00	7534.00	661.64	220.83	-763.44	8.00
MIP 3H BHL	14032.41	90.00	324.00	7534.00	6620.40	5054.71	-4275.46	0.00

From(ft)	To(ft)	Action
0.00	6335.00	Drill Tangent
		Hold on inc 0.00°
		Hold on Az 199.28°
		From 0.00 ft TVD to 6335.00 ft TVD.
6335.00	6717.70	Build 8.00°/100ft
		From inc 0.00° to 30.62°
		On Az 199.28°
		From 6335.00 ft TVD to 6699.74 ft TVD.
6717.70	6721.62	Drill Tangent
		Hold on inc 30.62°
		Hold on Az 199.28°
		From 6699.74 ft TVD to 6703.12 ft TVD.
6721.62	8057.41	Curve 8.00°/100ft
		From inc 30.62° to 90.00°
		From Az 199.28° to 324.00°
		From 6703.12 ft TVD to 7534.00 ft TVD.
8057.41	14032.41	Drill Tangent
		Hold on inc 90.00°
		Hold on Az 324.00°
		From 7534.00 ft TVD to 7534.00 ft TVD.

- Northeast Natural MIP 3H Rev0 SLS 18Jun15
- Northeast Natural MIP 4H Surveys 0ft to 11473ft Offset
- Northeast Natural MIP 6H Surveys 0ft to 10189ft Offset
- Northeast Natural MIP 5H Rev0 SLS 18Jun15
- Northeast Natural MIP SW Rev0 SLS 23Jun15
- MIP 3H TP
- MIP 3H KOP
- MIP 3H West Hardline
- MIP 3H East Hardline
- MIP 3H BHL Hard line
- MIP 3H BHL

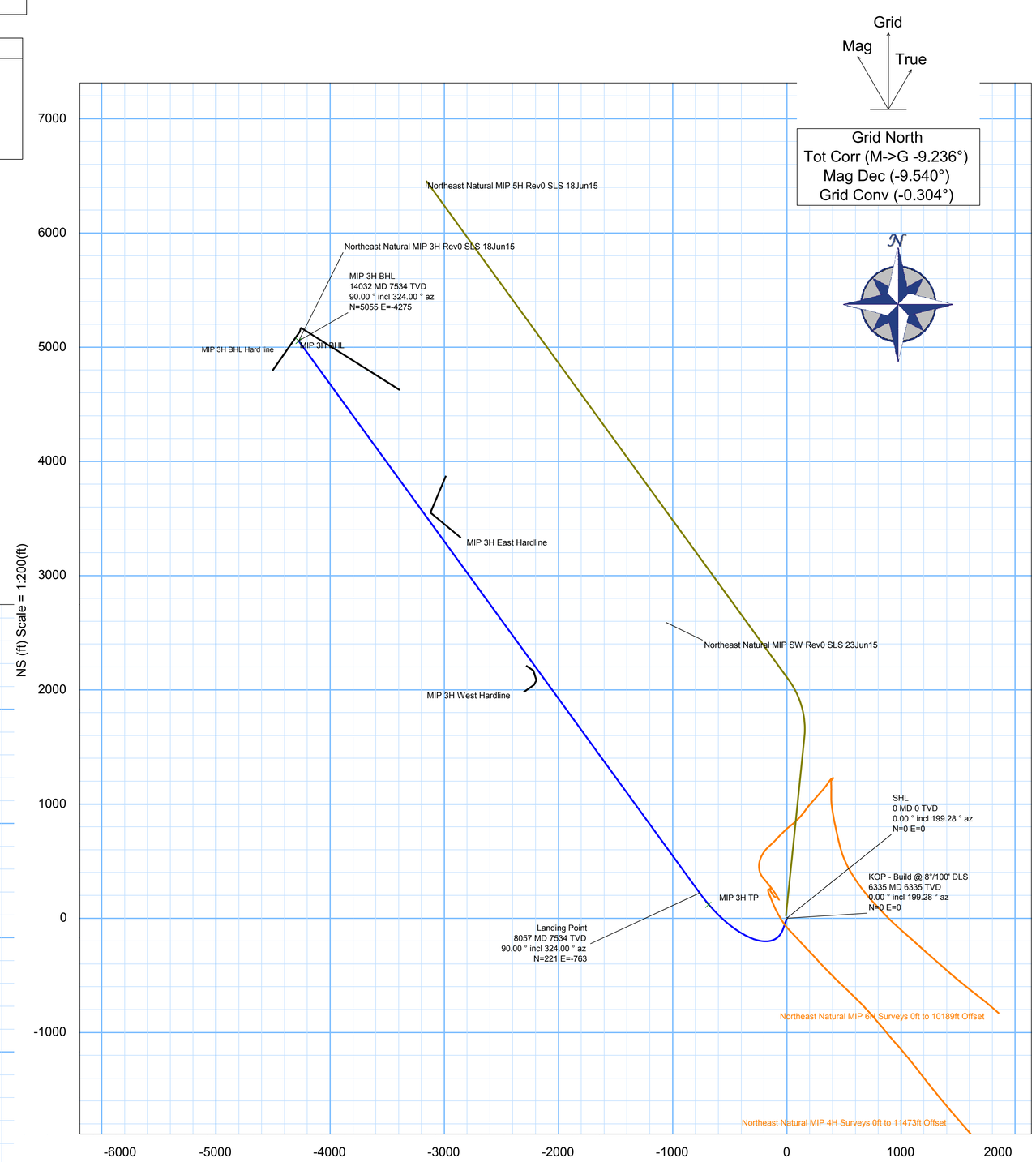

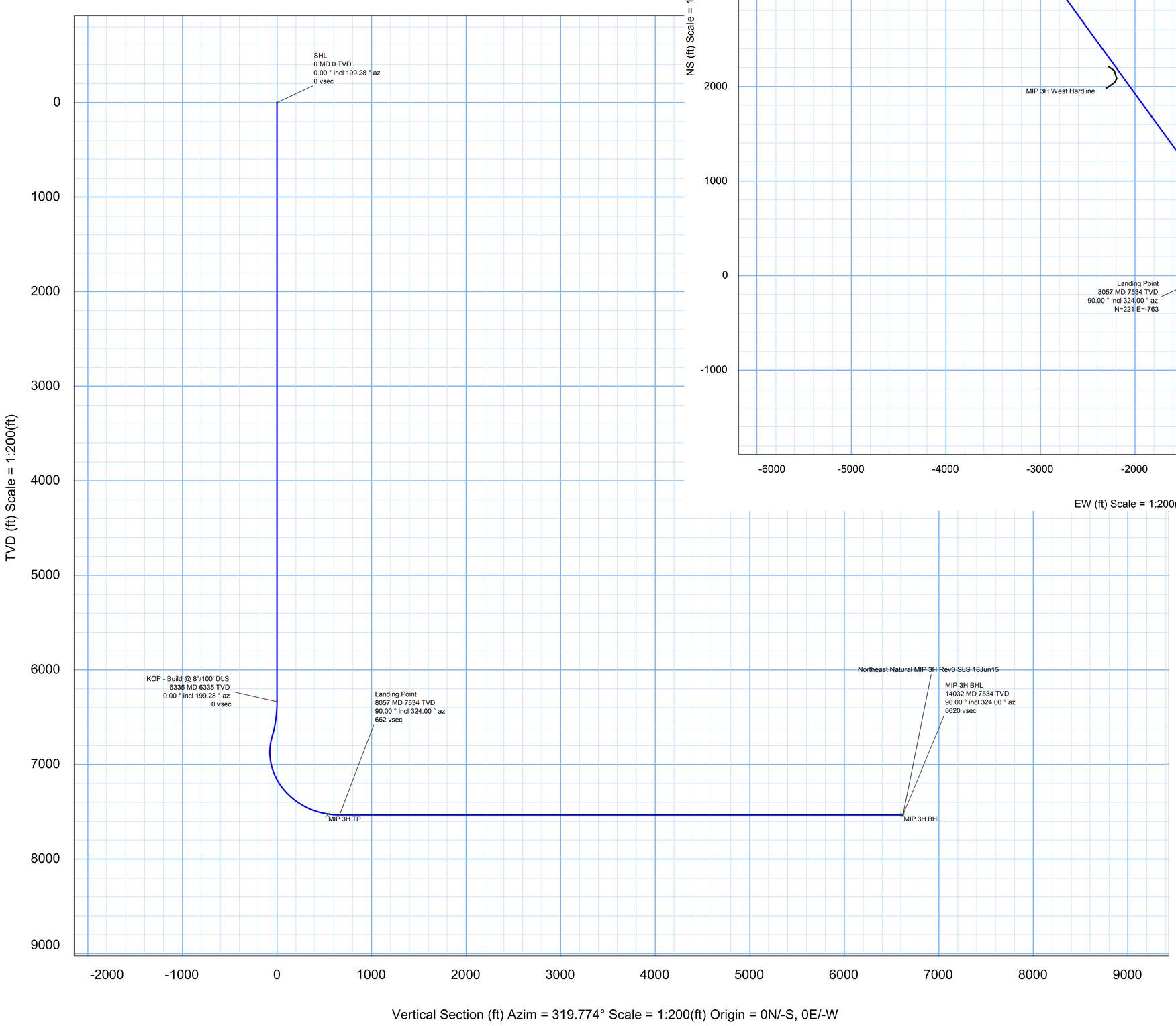

CONTROLLED

Plan ref	Northeast Natural MIP 3H Rev0 SLS 18Jun15
Drawing ref	
Copy number	of 3
Date	23-Jun-2015

1	Drawn By	S. Shannon
Copy number	for	

Revised Date 7/29/2015

Northeast Natural Energy
AFE Summary

Well:	MIP 3H	Proposed TD:	12,240	Target Formation:	Marcellus
Field:	Morgantown	Proposed TVD:	7,528	Orginal Date:	4/30/2015
Location:	Mon WV	Lateral Length:	5,691	Stage Spacing:	200

Intangible	Cost	Tangible	Cost
Pre-Drilling	$100,500	Pre-Drilling	$70,000
Top Hole	$512,000	Top Hole	$70,400
Horizontal	$994,100	Horizontal	$313,400
Completions	$2,194,500	Completions	$44,800
Drill out and Flowback	$270,100	Drill out and Flowback	
Surface Equipment	$118,100	Surface Equipment	$133,600
Total	$4,189,300	Total	$632,200

	Dry Hole Cost		Completions Cost
Total Pre-Drilling	$170,500	Total Completions	$2,239,300
Total Top Hole	$582,400	Total Drill out and Flowback	$270,100
Total Horizontal	$1,307,500		
Total Surface Equipment	$251,700		
Total	$2,312,100	Total	$2,509,400

Company	WI%	Gross Total	Net Cost
Northeast	100%	$4,821,500	$4,821,500
DOE	100%	$2,320,400	

Written by: Jay Hewitt

*This AFE represents only the estimated costs, and shall not supercede the terms of the Operating Agreement