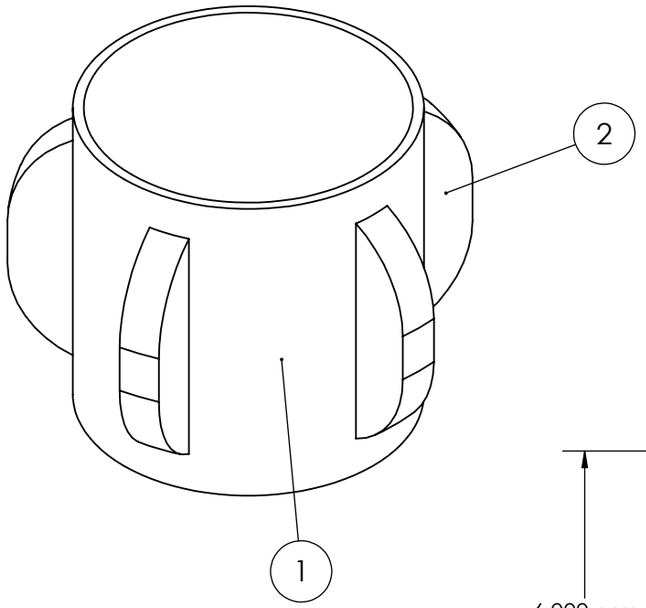

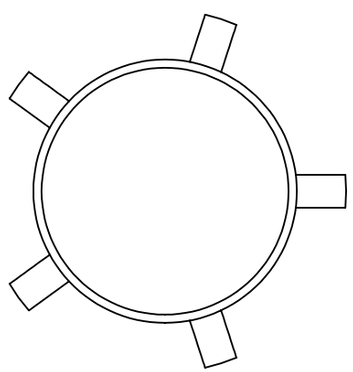

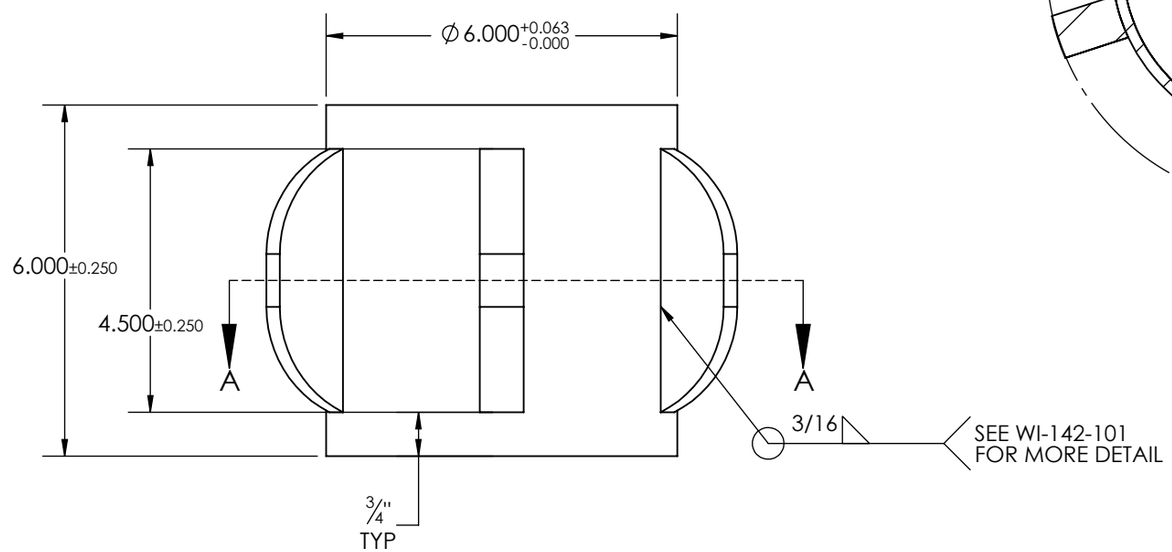

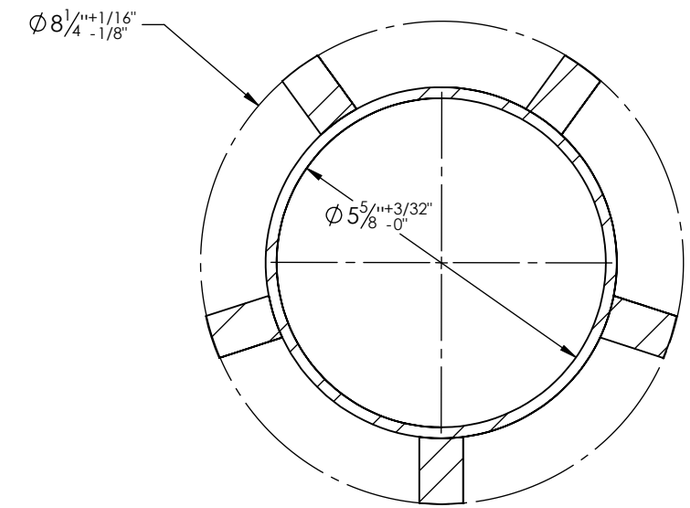

SECTION A-A
SCALE 1 : 3

DATE	REV	ECN	DESCRIPTION	APPROVED BY
23-Jun-2015	A	~	INITIAL RELEASE	HT

SolidWorks	LEGAL SIZE PAPER	SCALE: N.T.S	SHEET: 1 OF 1

STATUS:	WEIGHT lbs:	MATERIAL:
Manuf. Released	10.06	AS PER PARTS

TOLERANCES UNLESS OTHERWISE SPECIFIED

TOLERANCE	ANGLE	SURFACE	*CIRCULARITY*	*CONCENTRICITY TO O.D.*
X (FRAC) ±.060"	±1.00°	500 Rms	.025"	.025" TIR
X.X ±.030"	±.50°	250 Rms	.030"	.015" TIR
X.XX ±.015"	±.25°	125 Rms	.015"	.015" TIR
X.XXX ±.005"	±.10°	63 Rms	.005"	.015" TIR
X.XXXX ±.0005"	±.05°	32 Rms	.0005"	.015" TIR

OTHER SPECIFICATIONS

1. UNITS ARE IN INCHES
2. ALL THREAD SURFACE - 32
3. POLISH ALL RADII
4. BREAK EDGES 0.03"x45° CHAMFER OR 0.030R FILLET MAX.

NOTICE

THIS DRAWING AND DATA EMBODY ARE PROPRIETARY INFORMATION WHICH IS THE CONFIDENTIAL PROPERTY OF TOP-CO INC AND SHALL NOT BE COPIED, REPRODUCED, DISCLOSED TO OTHERS OR USED IN WHOLE OR IN PART FOR ANY PURPOSES, WITHOUT THE EXPRESS WRITTEN PERMISSION OF TOP-CO INC. THIS IS LOANED IN CONFIDENCE WITH THE UNDERSTANDING THAT IT SHALL BE RETURNED ON DEMAND OR WITH THE FINISHED PARTS.

TOP-CO™
7720-17 STREET EDMONTON
ALBERTA, CANADA, T6P 1S7
PHONE: (780) 440-4440
FAX: (780) 440-4443

5 1/2	T345	~	~	~

CENTRALIZER-SOLID BODY, RIGID STRAIGHT,WELDED

OPTION 1:	OPTION 3:	MISC OPTION 1:	DRAWING #:	
~	~	~	345-140-210-S6	
OPTION 2: ~	OPTION 4: ~	MISC OPTION 2: ~	DRAWN BY: A.KHAN	REV: A

ITEM NO.	DRAWING #	DESCRIPTION	MATERIAL	QTY.
1	CO-345-140-S6	COLLAR	TU-A500-6.000X5.625X6.000	1
2	RB-345-029-S4.5	RIB	RM-A36-PLATE-0.75, 0.001731	5